5. Engine Electrical System

A: WIRING DIAGRAM

1. NON-TURBO MODEL

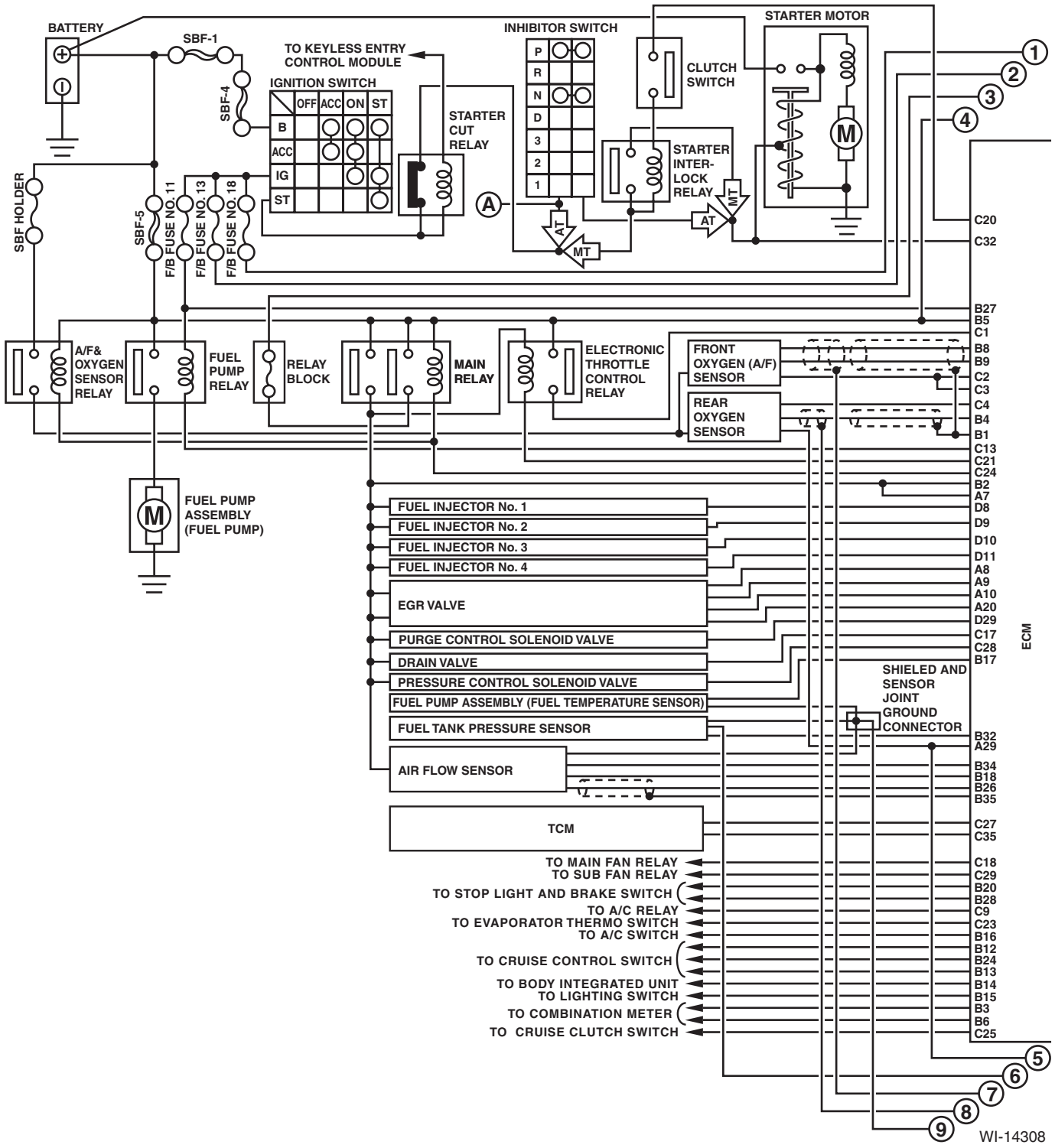

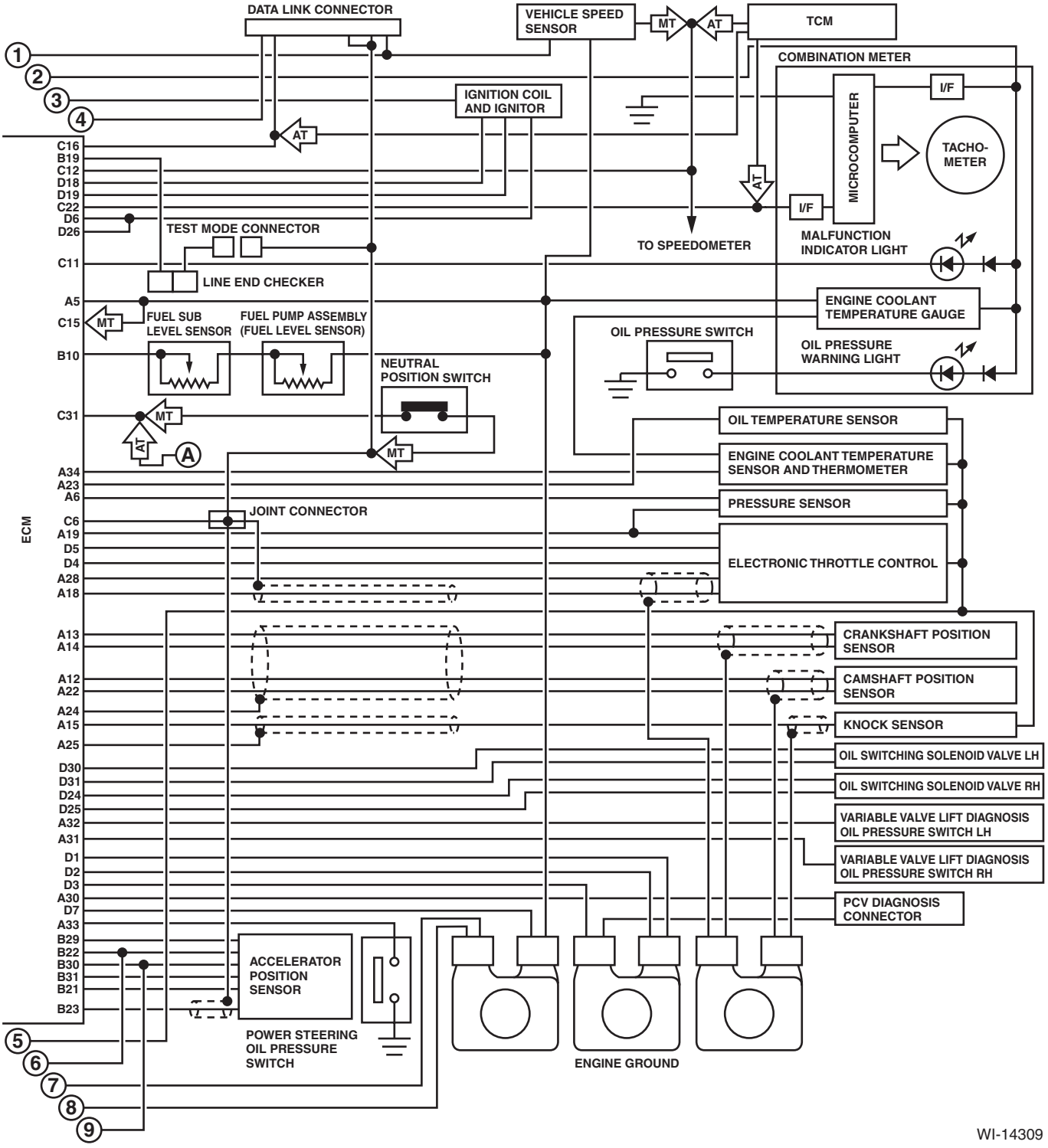
DATA LINK CONNECTOR
VEHICLE SPEED SENSOR
MT
AT
TCM
COMBINATION METER
I/F
MICROCOMPUTER
TACHO-METER
IGNITION COIL AND IGNITOR
AT
C16
B19
C12
D18
D19
C22
D6
D26
TEST MODE CONNECTOR
TO SPEEDOMETER
MALFUNCTION INDICATOR LIGHT
C11
LINE END CHECKER
A5
C15
FUEL SUB LEVEL SENSOR
FUEL PUMP ASSEMBLY (FUEL LEVEL SENSOR)
ENGINE COOLANT TEMPERATURE GAUGE
OIL PRESSURE SWITCH
OIL PRESSURE WARNING LIGHT
B10
NEUTRAL POSITION SWITCH
C31
A
OIL TEMPERATURE SENSOR
ENGINE COOLANT TEMPERATURE SENSOR AND THERMOMETER
A34
A23
A6
PRESSURE SENSOR
JOINT CONNECTOR
ECM
C6
A19
D5
D4
A28
A18
ELECTRONIC THROTTLE CONTROL
A13
A14
CRANKSHAFT POSITION SENSOR
A12
A22
CAMSHAFT POSITION SENSOR
A24
A15
KNOCK SENSOR
A25
D30
D31
D24
D25
A32
A31
OIL SWITCHING SOLENOID VALVE LH
OIL SWITCHING SOLENOID VALVE RH
VARIABLE VALVE LIFT DIAGNOSIS OIL PRESSURE SWITCH LH
D1
D2
D3
A30
D7
A33
B29
B22
B30
B31
B21
B23
VARIABLE VALVE LIFT DIAGNOSIS OIL PRESSURE SWITCH RH
PCV DIAGNOSIS CONNECTOR
ACCELERATOR POSITION SENSOR
POWER STEERING OIL PRESSURE SWITCH
ENGINE GROUND
1
2
3
4
5
6
7
8
9
WI-14309

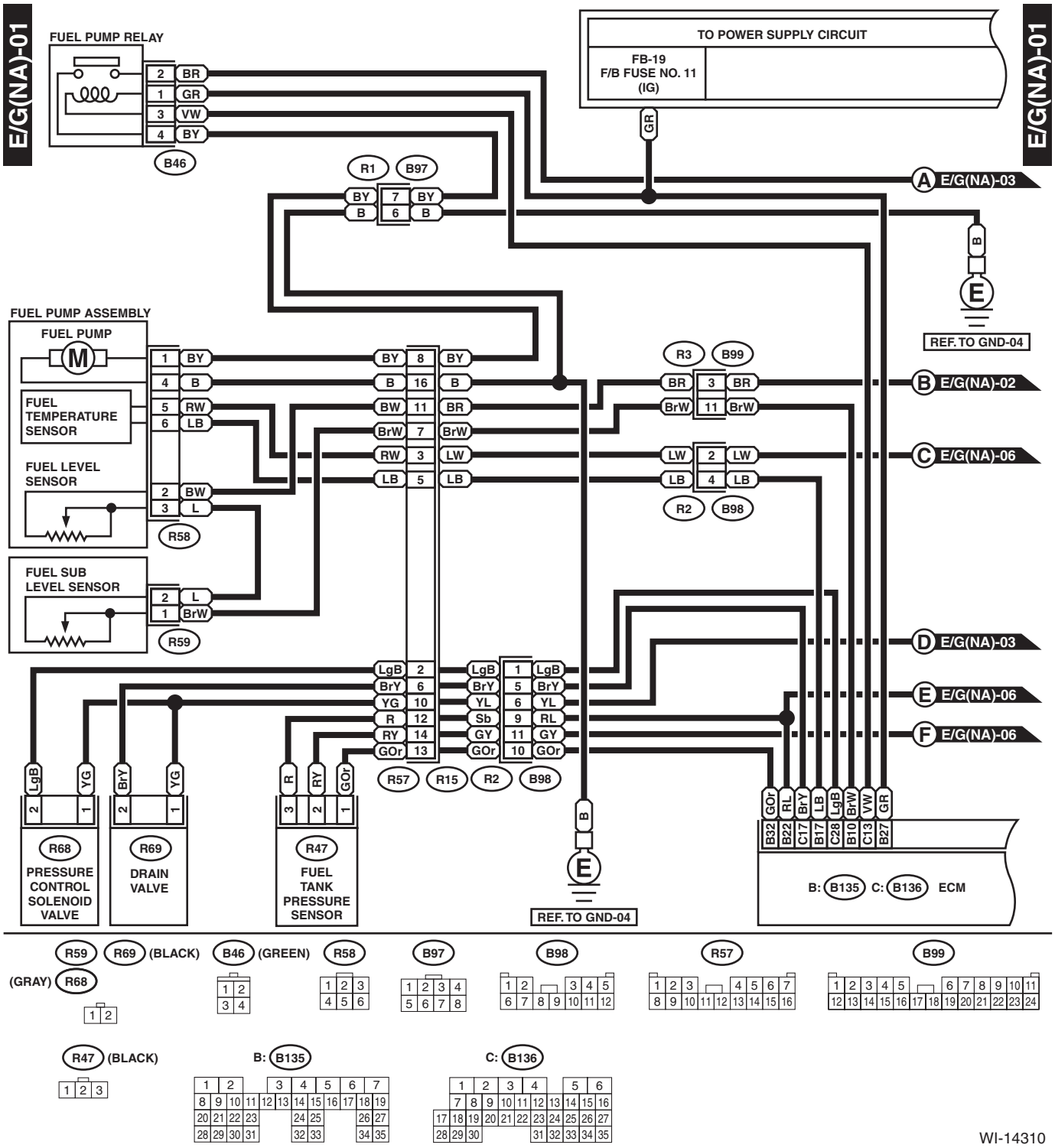
E/G(NA)-01
FUEL PUMP RELAY
TO POWER SUPPLY CIRCUIT
FB-19
F/B FUSE NO. 11
(IG)
B46
R1
B97
E/G(NA)-03
REF. TO GND-04
FUEL PUMP ASSEMBLY
FUEL PUMP
FUEL TEMPERATURE SENSOR
FUEL LEVEL SENSOR
R58
FUEL SUB LEVEL SENSOR
R59
R3
B99
E/G(NA)-02
E/G(NA)-06
R2
B98
E/G(NA)-03
E/G(NA)-06
E/G(NA)-06
R57
R15
R68
PRESSURE CONTROL SOLENOID VALVE
R69
DRAIN VALVE
R47
FUEL TANK PRESSURE SENSOR
B: B135
C: B136
ECM
(BLACK)
(GREEN)
(GRAY)
WI-14310

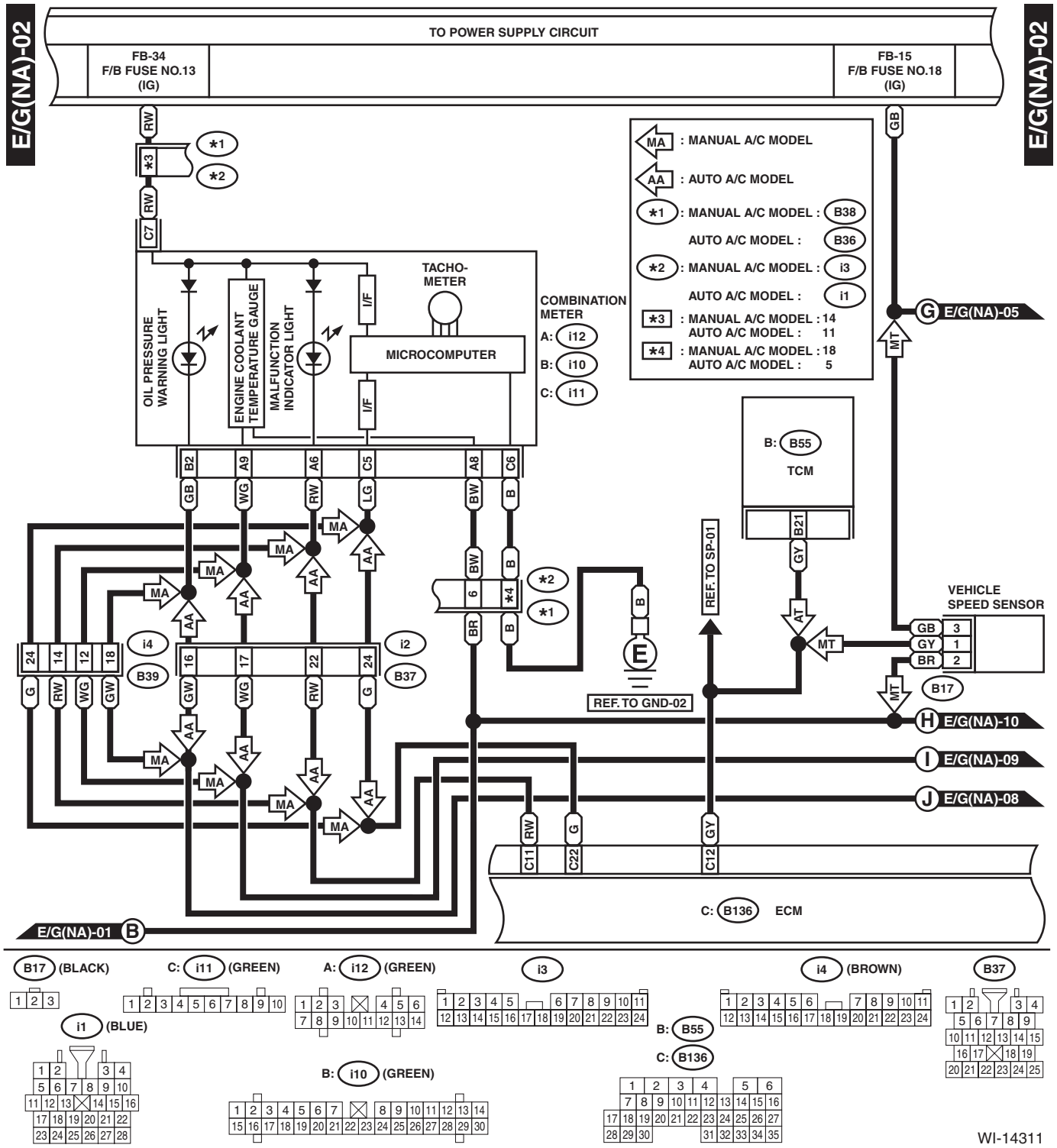
E/G(NA)-02
TO POWER SUPPLY CIRCUIT
FB-34
F/B FUSE NO.13
(IG)
FB-15
F/B FUSE NO.18
(IG)
MA : MANUAL A/C MODEL
AA : AUTO A/C MODEL
*1 : MANUAL A/C MODEL : B38
AUTO A/C MODEL : B36
*2 : MANUAL A/C MODEL : i3
AUTO A/C MODEL : i1
*3 : MANUAL A/C MODEL : 14
AUTO A/C MODEL : 11
*4 : MANUAL A/C MODEL : 18
AUTO A/C MODEL : 5
TACHO-METER
COMBINATION METER
A: i12
B: i10
C: i11
OIL PRESSURE WARNING LIGHT
ENGINE COOLANT TEMPERATURE GAUGE
MALFUNCTION INDICATOR LIGHT
I/F
MICROCOMPUTER
B: B55
TCM
REF. TO SP-01
VEHICLE SPEED SENSOR
REF. TO GND-02
E/G(NA)-05
E/G(NA)-10
E/G(NA)-09
E/G(NA)-08
E/G(NA)-01
C: B136 ECM
B17 (BLACK)
C: i11 (GREEN)
A: i12 (GREEN)
i3
i4 (BROWN)
B37
i1 (BLUE)
B: i10 (GREEN)
B: B55
C: B136
WI-14311

WIRING SYSTEM

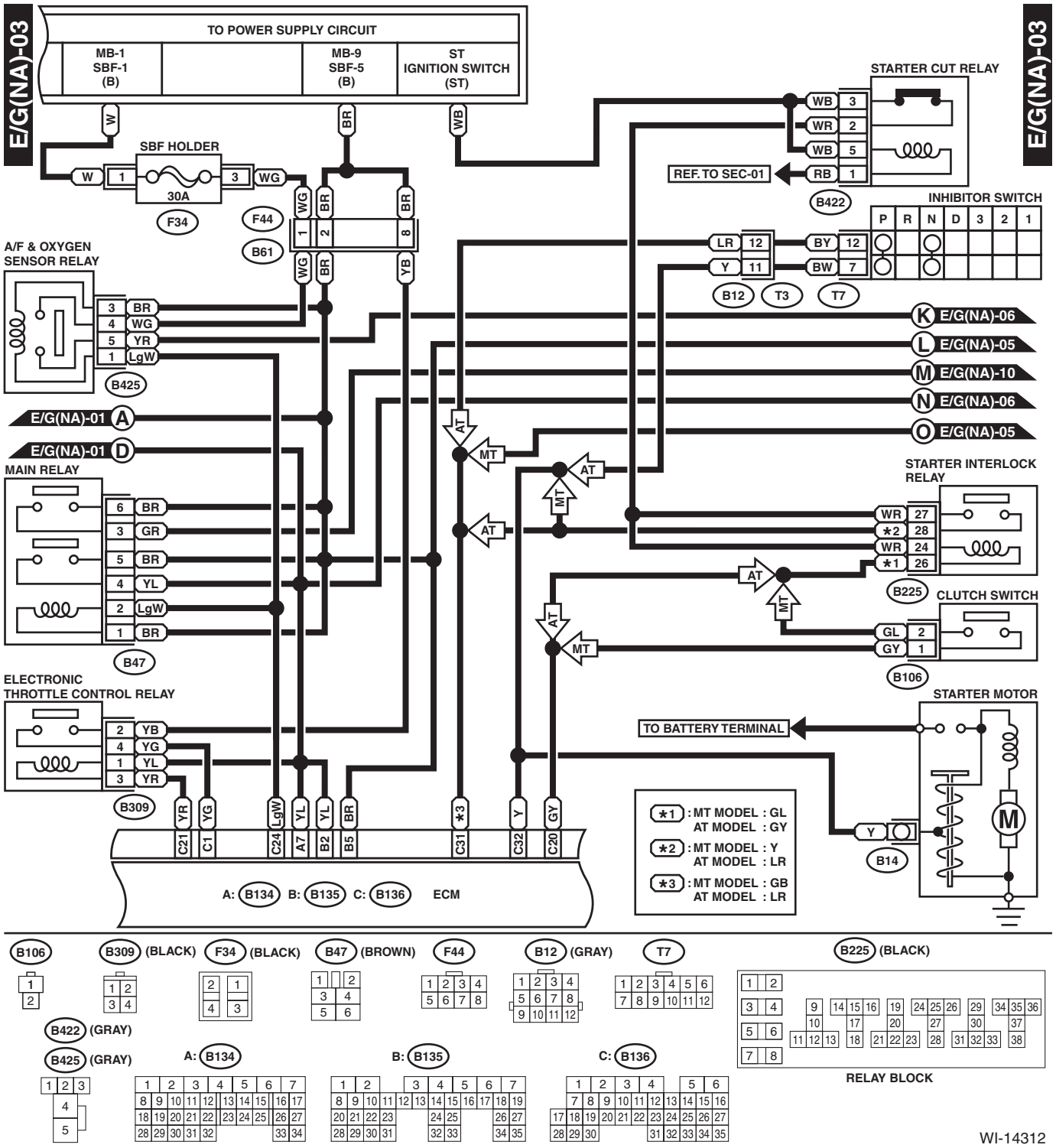

E/G(NA)-04

E/G(NA)-04

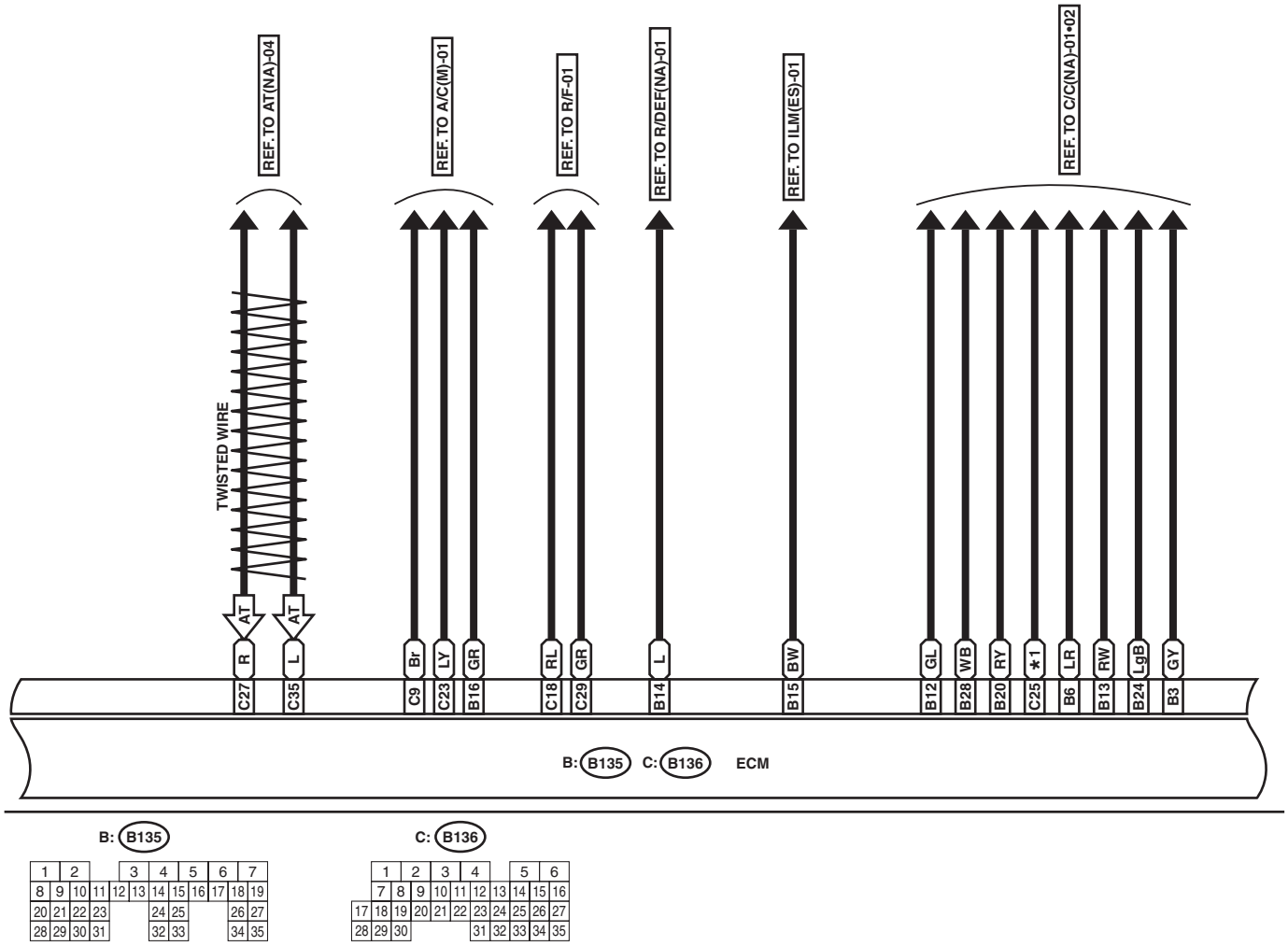

WI-14313

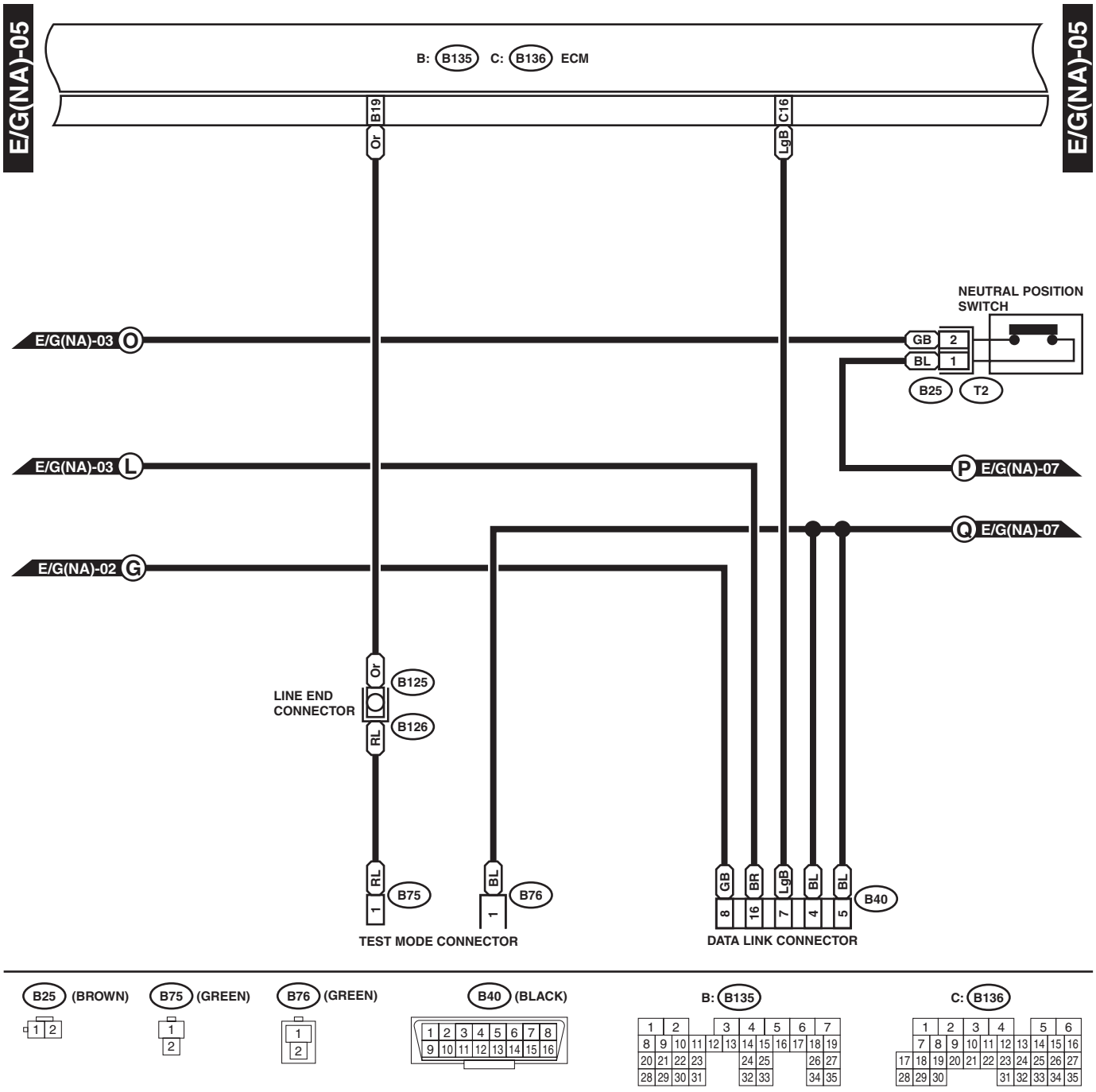
E/G(NA)-05
B: B135 C: B136 ECM
B19
Or
C16
LgB
NEUTRAL POSITION SWITCH
E/G(NA)-03 O
GB 2
BL 1
B25 T2
E/G(NA)-03 L
P E/G(NA)-07
Q E/G(NA)-07
E/G(NA)-02 G
LINE END CONNECTOR
Or B125
RL B126
RL 1 B75
BL 1 B76
TEST MODE CONNECTOR
GB 8
BR 16
LgB 7
BL 4
BL 5
B40
DATA LINK CONNECTOR
B25 (BROWN)
B75 (GREEN)
B76 (GREEN)
B40 (BLACK)
B: B135
C: B136

WI-14314

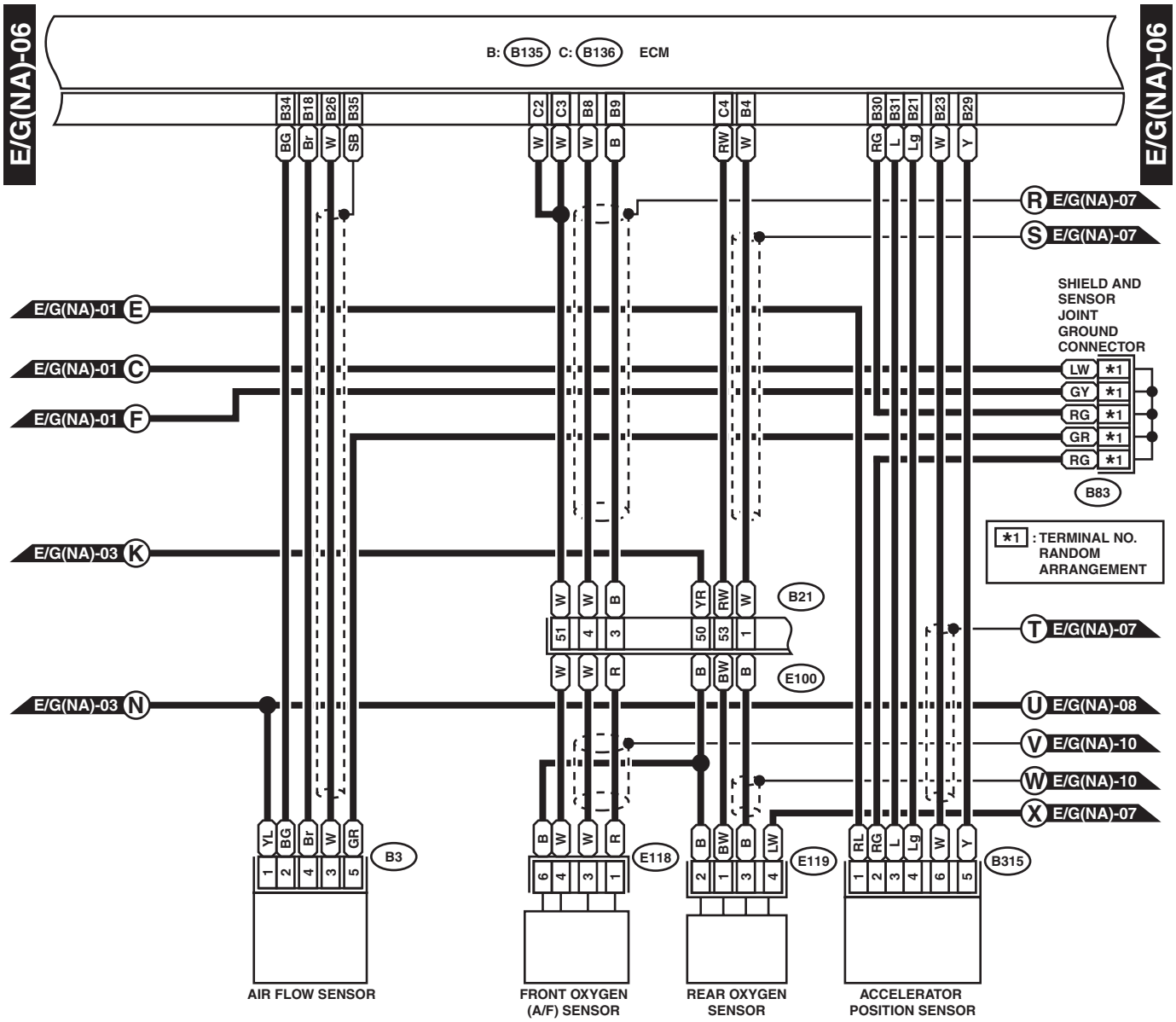
E/G(NA)-06
B: B135 C: B136 ECM
B34 B18 B26 B35 C2 C3 B8 B9 C4 B4 B30 B31 B21 B23 B29
BG Br W SB W W W B RW W RG L Lg W Y
R E/G(NA)-07
S E/G(NA)-07
E/G(NA)-01 E
E/G(NA)-01 C
E/G(NA)-01 F
E/G(NA)-03 K
E/G(NA)-03 N
SHIELD AND SENSOR JOINT GROUND CONNECTOR
LW *1
GY *1
RG *1
GR *1
RG *1
B83
*1 : TERMINAL NO. RANDOM ARRANGEMENT
B21
W W B YR RW W
51 4 3 50 53 1
W W R B BW B
E100
T E/G(NA)-07
U E/G(NA)-08
V E/G(NA)-10
W E/G(NA)-10
X E/G(NA)-07
YL BG Br W GR
1 2 4 3 5
B3
B W W R
6 4 3 1
E118
B BW B LW
2 1 3 4
E119
RL RG L Lg W Y
1 2 3 4 6 5
B315
AIR FLOW SENSOR
FRONT OXYGEN (A/F) SENSOR
REAR OXYGEN SENSOR
ACCELERATOR POSITION SENSOR
E119 (DARK GRAY)
B3 (BLACK)
B315 (BLACK)
E118
B83
B21 (BLACK)
B: B135
C: B136
WI-14315

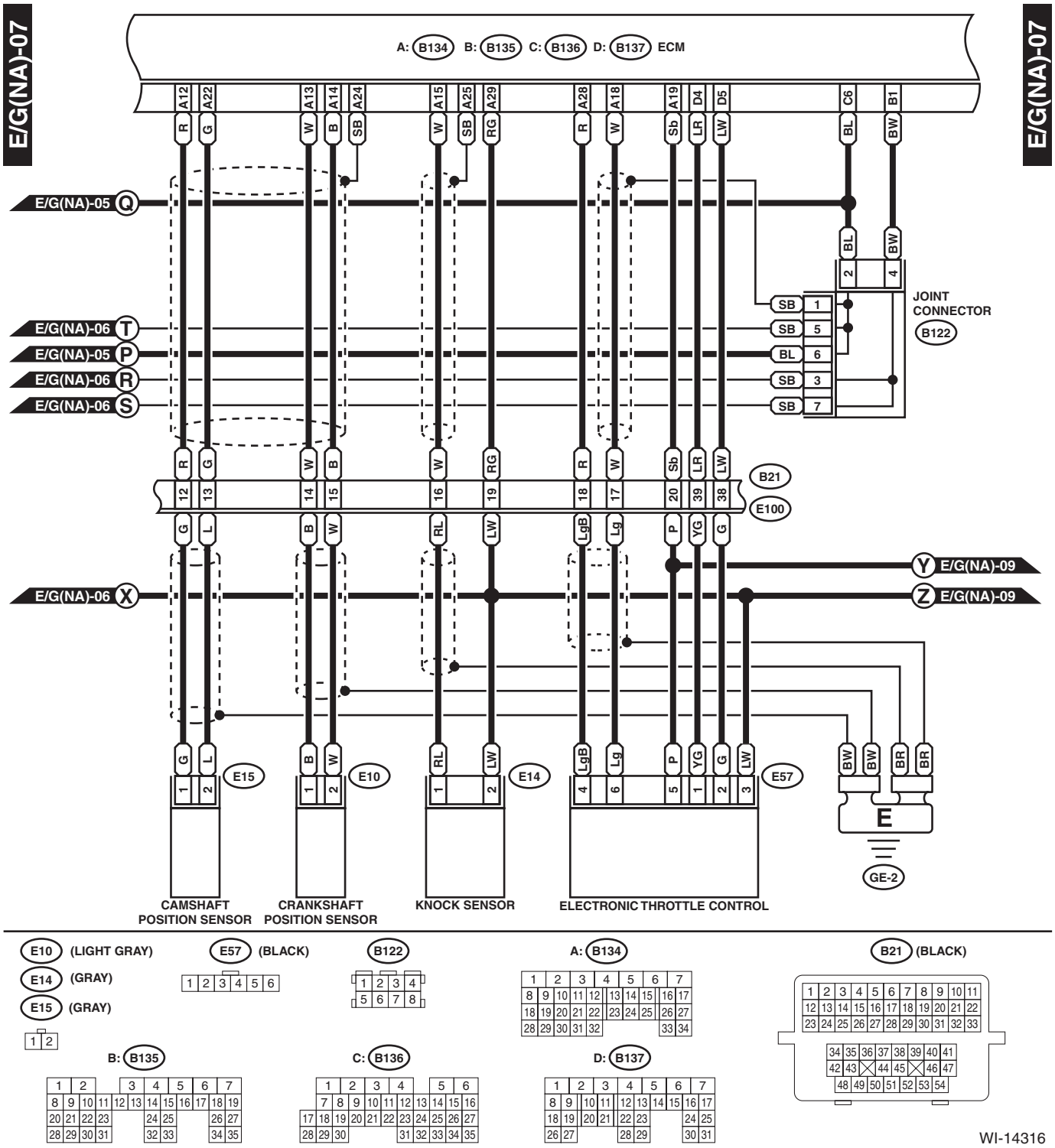

E10 (LIGHT GRAY)
E14 (GRAY)
E15 (GRAY)

E57 (BLACK)

B122

A: B134

B21 (BLACK)

B: B135

C: B136

D: B137

WI-14316

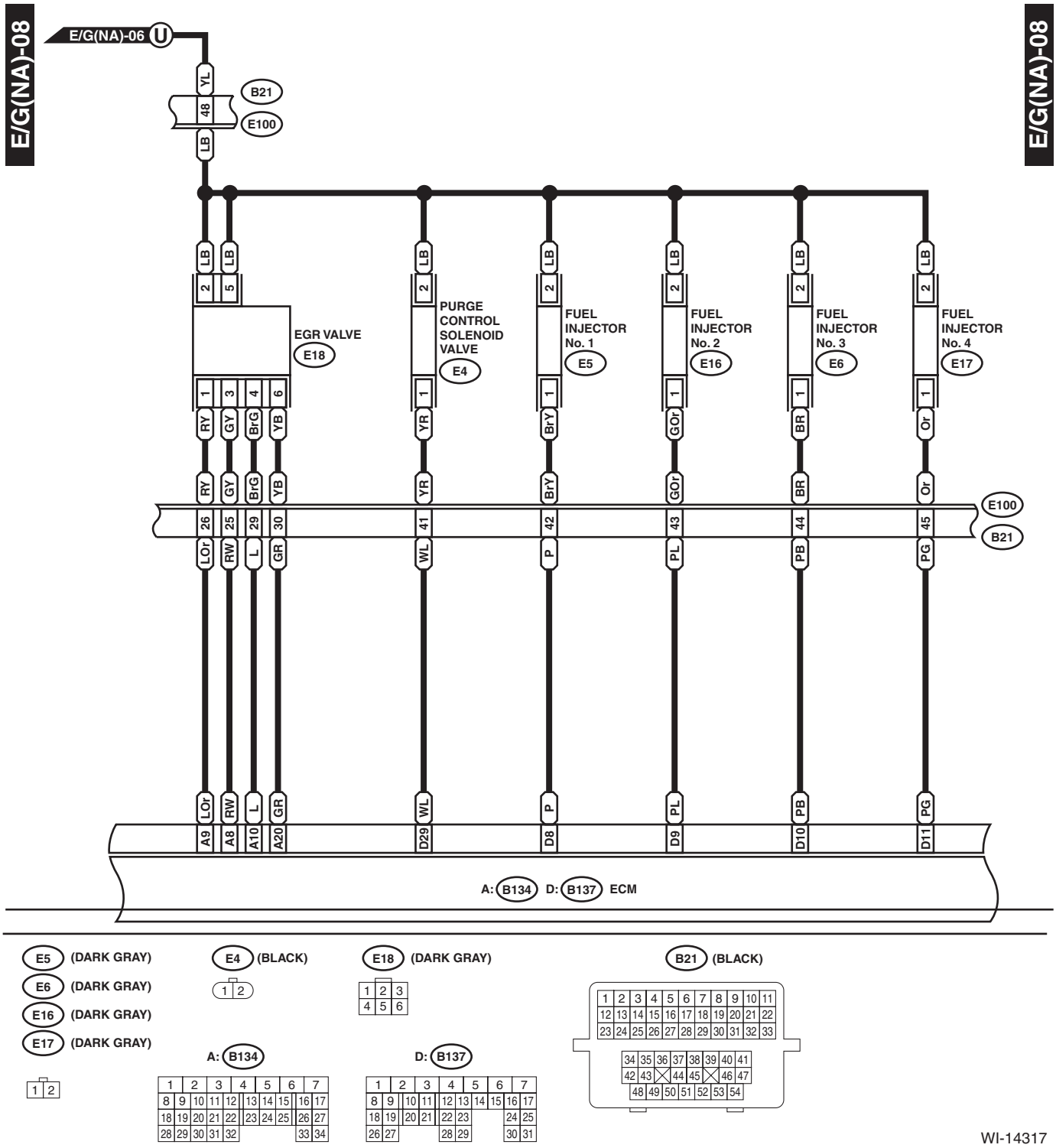
E/G(NA)-08
E/G(NA)-06 U
YL
48
LB
B21
E100
EGR VALVE
E18
PURGE CONTROL SOLENOID VALVE
E4
FUEL INJECTOR No. 1
E5
FUEL INJECTOR No. 2
E16
FUEL INJECTOR No. 3
E6
FUEL INJECTOR No. 4
E17
RY
GY
BrG
YB
YR
BrY
GOr
BR
Or
26
25
29
30
41
42
43
44
45
LOr
RW
L
GR
WL
P
PL
PB
PG
A9
A8
A10
A20
D29
D8
D9
D10
D11
A: B134 D: B137 ECM
E5 (DARK GRAY)
E6 (DARK GRAY)
E16 (DARK GRAY)
E17 (DARK GRAY)
E4 (BLACK)
E18 (DARK GRAY)
B21 (BLACK)
A: B134
D: B137
WI-14317

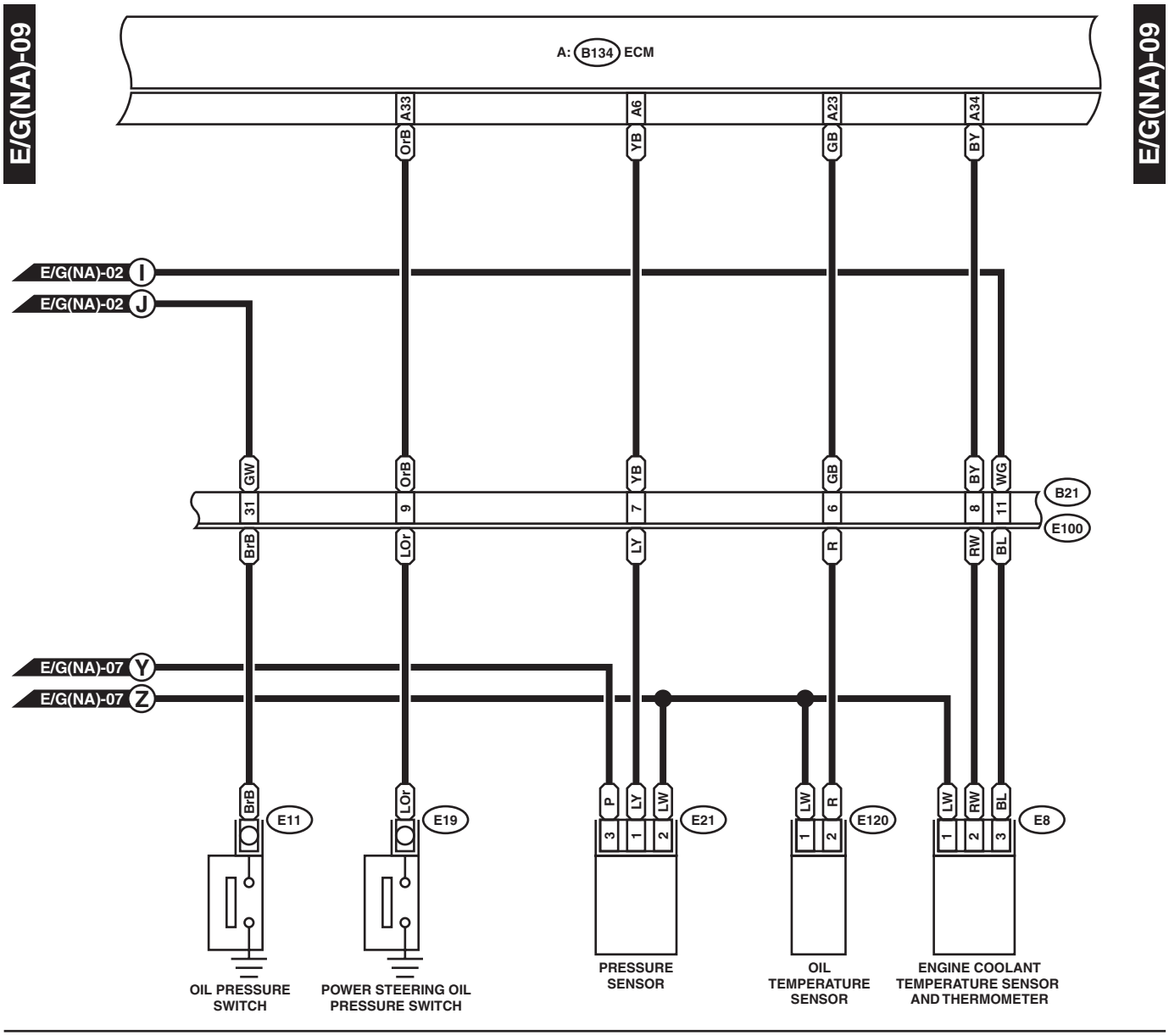
E/G(NA)-09
A: B134 ECM
A33
A6
A23
A34
OrB
YB
GB
BY
E/G(NA)-02 I
E/G(NA)-02 J
GW
OrB
YB
GB
BY
WG
31
9
7
6
8
11
B21
E100
BrB
LOr
LY
R
RW
BL
E/G(NA)-07 Y
E/G(NA)-07 Z
BrB
E11
LOr
E19
P
LY
LW
E21
LW
R
E120
LW
RW
BL
E8
OIL PRESSURE SWITCH
POWER STEERING OIL PRESSURE SWITCH
PRESSURE SENSOR
OIL TEMPERATURE SENSOR
ENGINE COOLANT TEMPERATURE SENSOR AND THERMOMETER

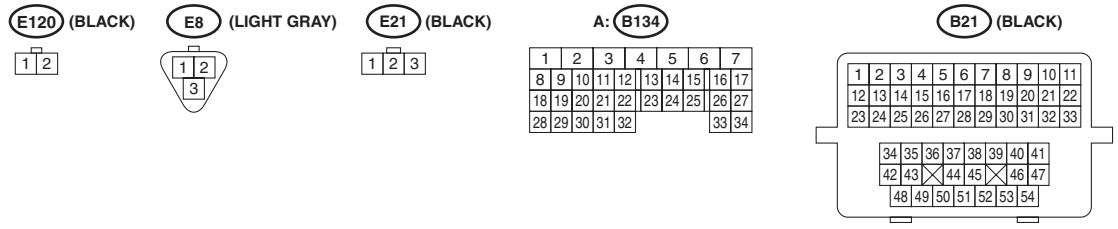
E120 (BLACK)
E8 (LIGHT GRAY)
E21 (BLACK)
A: B134
B21 (BLACK)

WI-14318

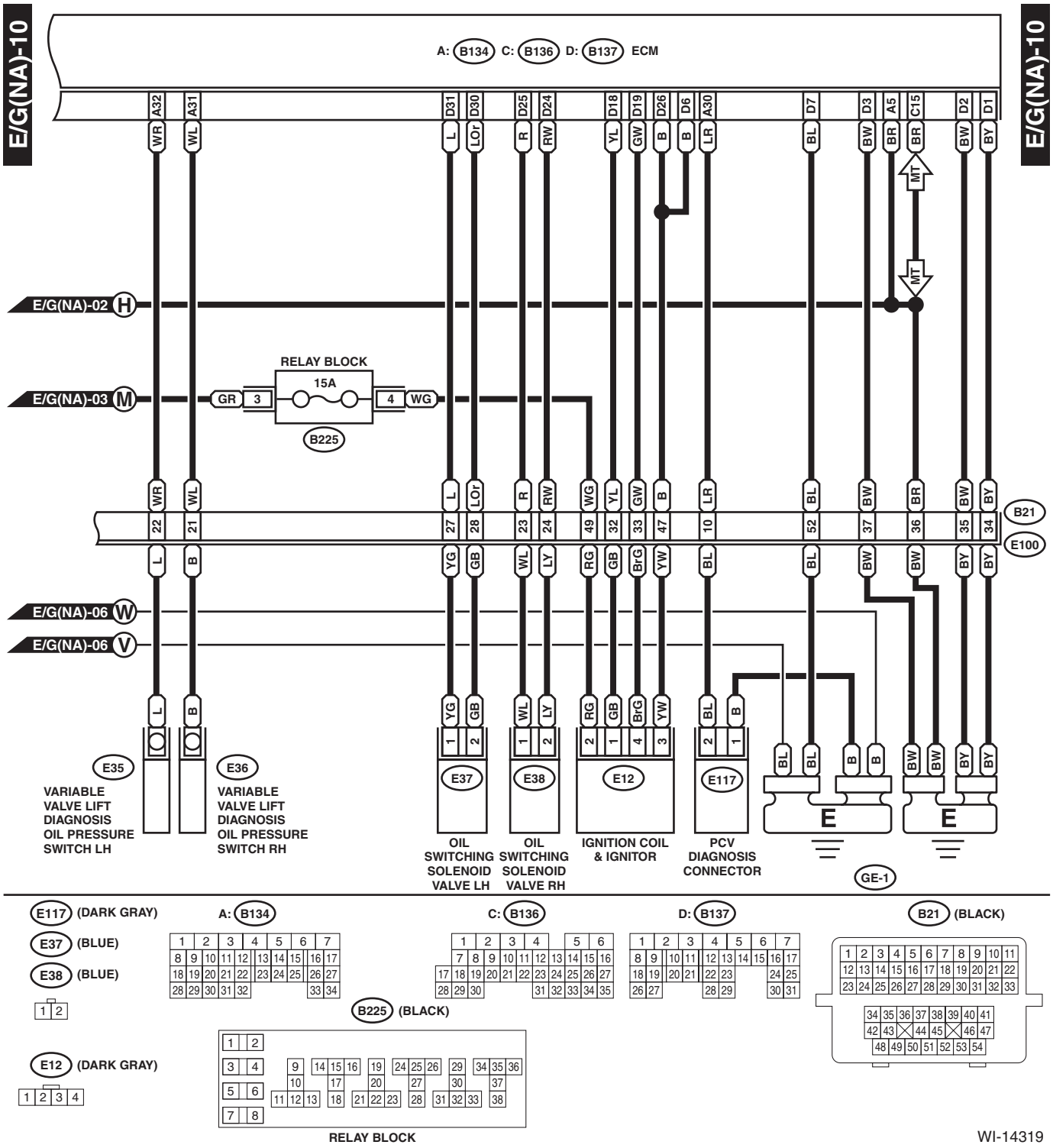
E/G(NA)-10
A: B134 C: B136 D: B137 ECM
E/G(NA)-02 H
E/G(NA)-03 M
RELAY BLOCK
15A
B225
B21
E100
E/G(NA)-06 W
E/G(NA)-06 V
E35
VARIABLE VALVE LIFT DIAGNOSIS OIL PRESSURE SWITCH LH
E36
VARIABLE VALVE LIFT DIAGNOSIS OIL PRESSURE SWITCH RH
E37
OIL SWITCHING SOLENOID VALVE LH
E38
OIL SWITCHING SOLENOID VALVE RH
E12
IGNITION COIL & IGNITOR
E117
PCV DIAGNOSIS CONNECTOR
GE-1
MT

E117 (DARK GRAY)
E37 (BLUE)
E38 (BLUE)
A: B134
C: B136
D: B137
B21 (BLACK)
B225 (BLACK)
E12 (DARK GRAY)
RELAY BLOCK

WI-14319

2. TURBO MODEL

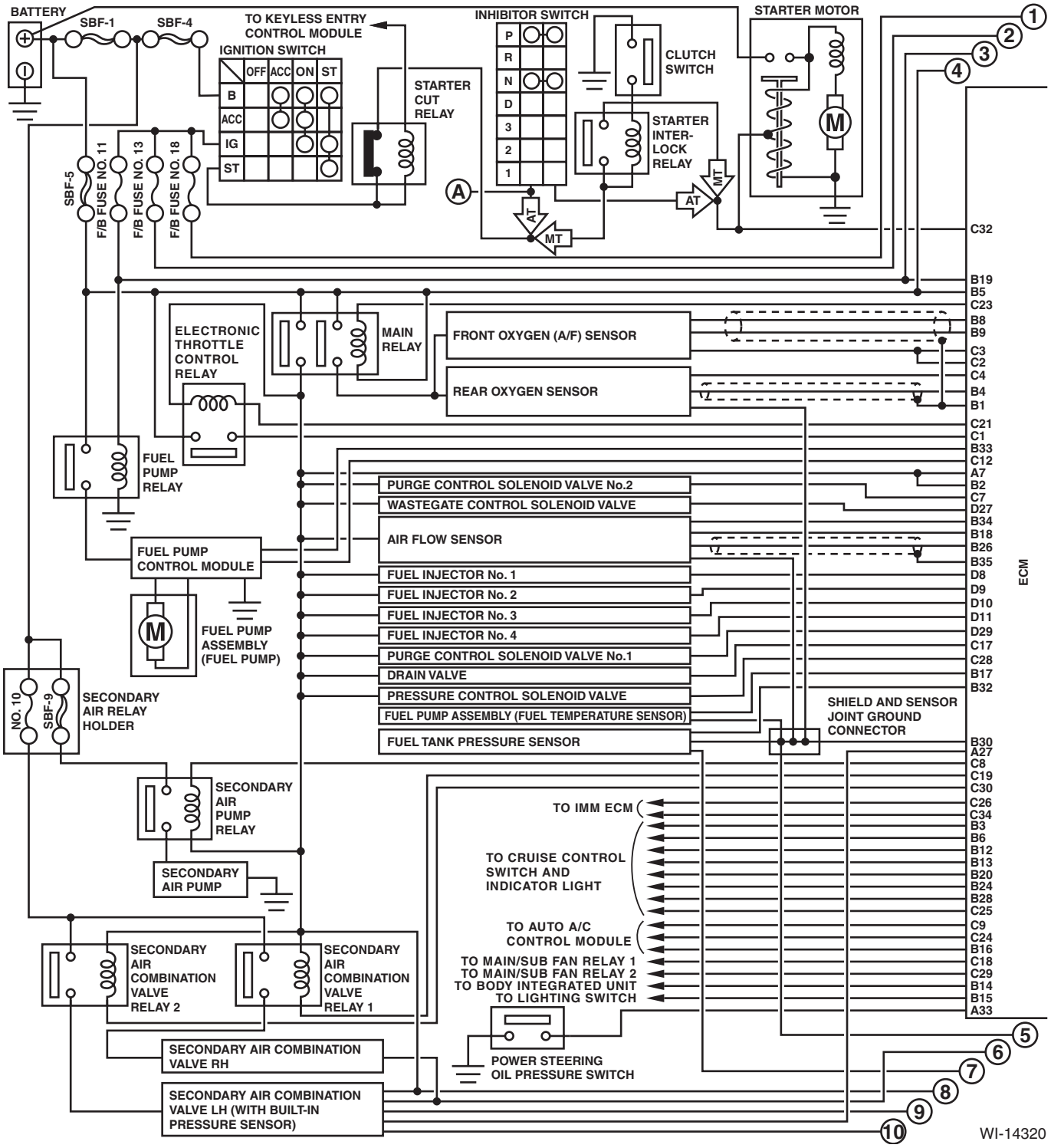

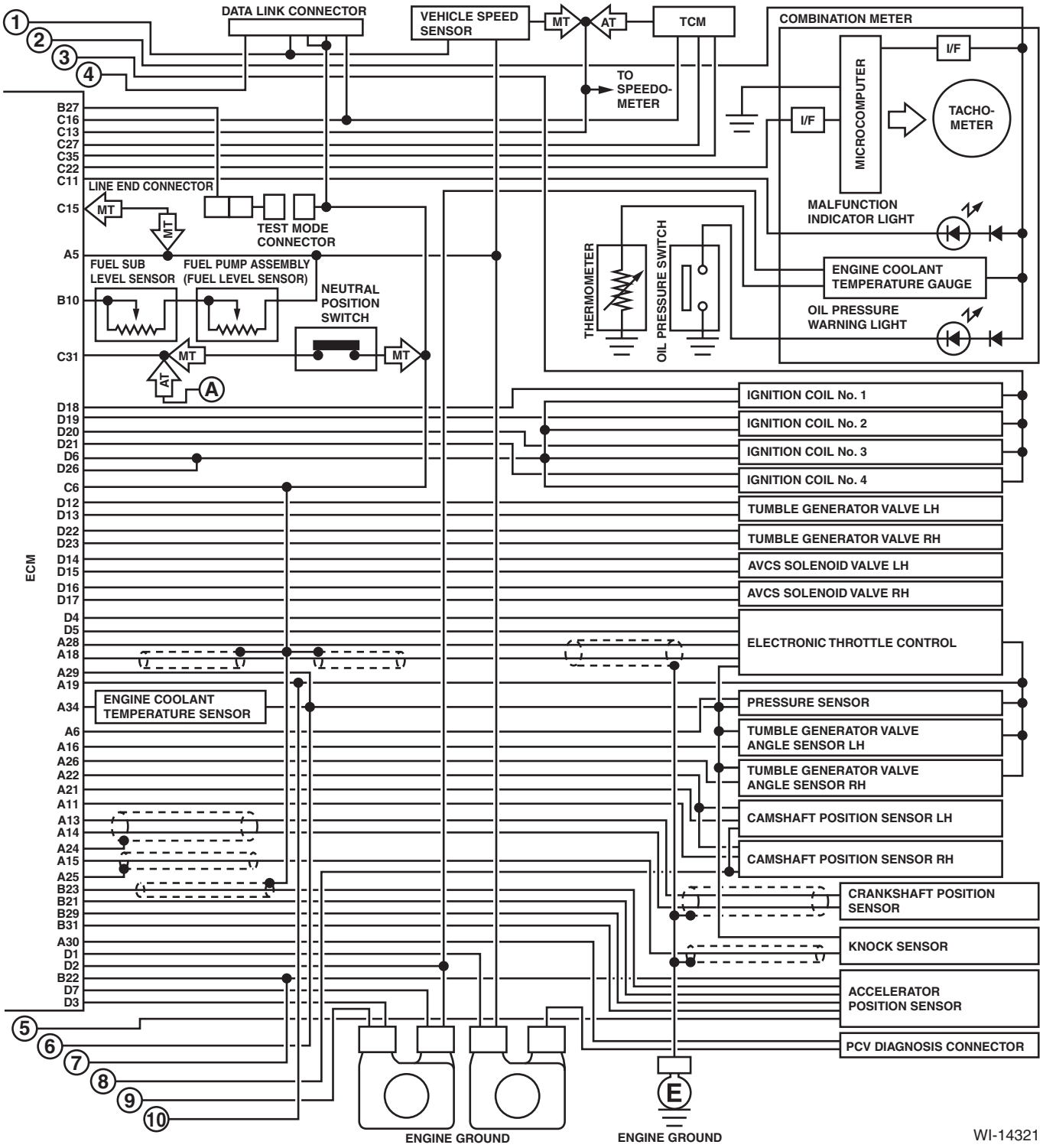
DATA LINK CONNECTOR
VEHICLE SPEED SENSOR
MT
AT
TCM
COMBINATION METER
I/F
MICROCOMPUTER
TACHO-METER
TO SPEEDO-METER
LINE END CONNECTOR
TEST MODE CONNECTOR
MALFUNCTION INDICATOR LIGHT
THERMOMETER
OIL PRESSURE SWITCH
ENGINE COOLANT TEMPERATURE GAUGE
OIL PRESSURE WARNING LIGHT
FUEL SUB LEVEL SENSOR
FUEL PUMP ASSEMBLY (FUEL LEVEL SENSOR)
NEUTRAL POSITION SWITCH
ECM
IGNITION COIL No. 1
IGNITION COIL No. 2
IGNITION COIL No. 3
IGNITION COIL No. 4
TUMBLE GENERATOR VALVE LH
TUMBLE GENERATOR VALVE RH
AVCS SOLENOID VALVE LH
AVCS SOLENOID VALVE RH
ELECTRONIC THROTTLE CONTROL
ENGINE COOLANT TEMPERATURE SENSOR
PRESSURE SENSOR
TUMBLE GENERATOR VALVE ANGLE SENSOR LH
TUMBLE GENERATOR VALVE ANGLE SENSOR RH
CAMSHAFT POSITION SENSOR LH
CAMSHAFT POSITION SENSOR RH
CRANKSHAFT POSITION SENSOR
KNOCK SENSOR
ACCELERATOR POSITION SENSOR
PCV DIAGNOSIS CONNECTOR
ENGINE GROUND
ENGINE GROUND
WI-14321

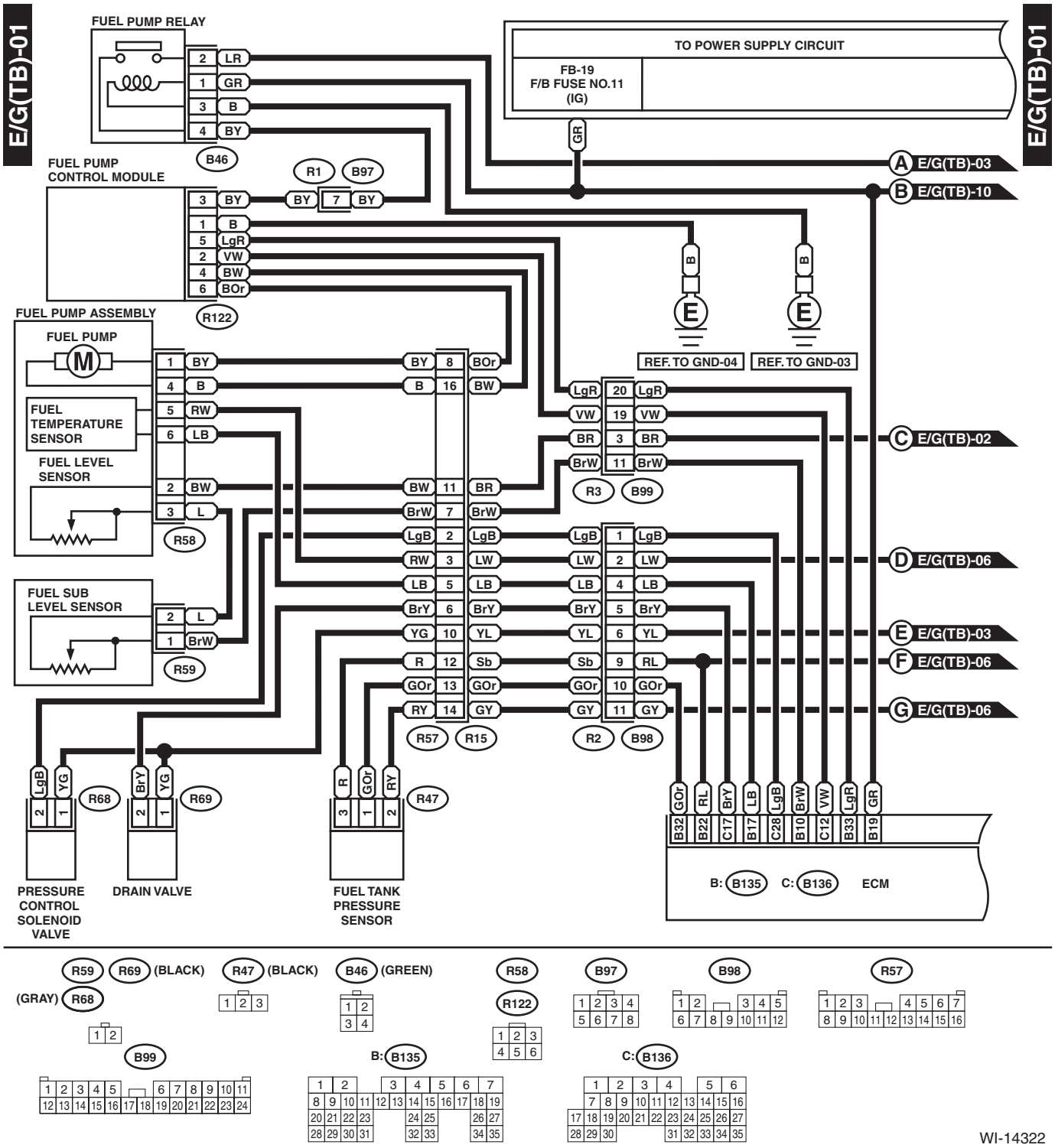
E/G(TB)-01
FUEL PUMP RELAY
TO POWER SUPPLY CIRCUIT
FB-19
F/B FUSE NO.11
(IG)
B46
FUEL PUMP
CONTROL MODULE
R1
B97
R122
FUEL PUMP ASSEMBLY
FUEL PUMP
FUEL
TEMPERATURE
SENSOR
FUEL LEVEL
SENSOR
R58
FUEL SUB
LEVEL SENSOR
R59
REF. TO GND-04
REF. TO GND-03
R3
B99
R57
R15
R2
B98
E/G(TB)-03
E/G(TB)-10
E/G(TB)-02
E/G(TB)-06
E/G(TB)-03
E/G(TB)-06
E/G(TB)-06
R68
R69
R47
PRESSURE
CONTROL
SOLENOID
VALVE
DRAIN VALVE
FUEL TANK
PRESSURE
SENSOR
B: B135
C: B136
ECM
R59 R69 (BLACK)
R47 (BLACK)
B46 (GREEN)
R58
B97
B98
R57
(GRAY) R68
R122
B99
B: B135
C: B136
WI-14322

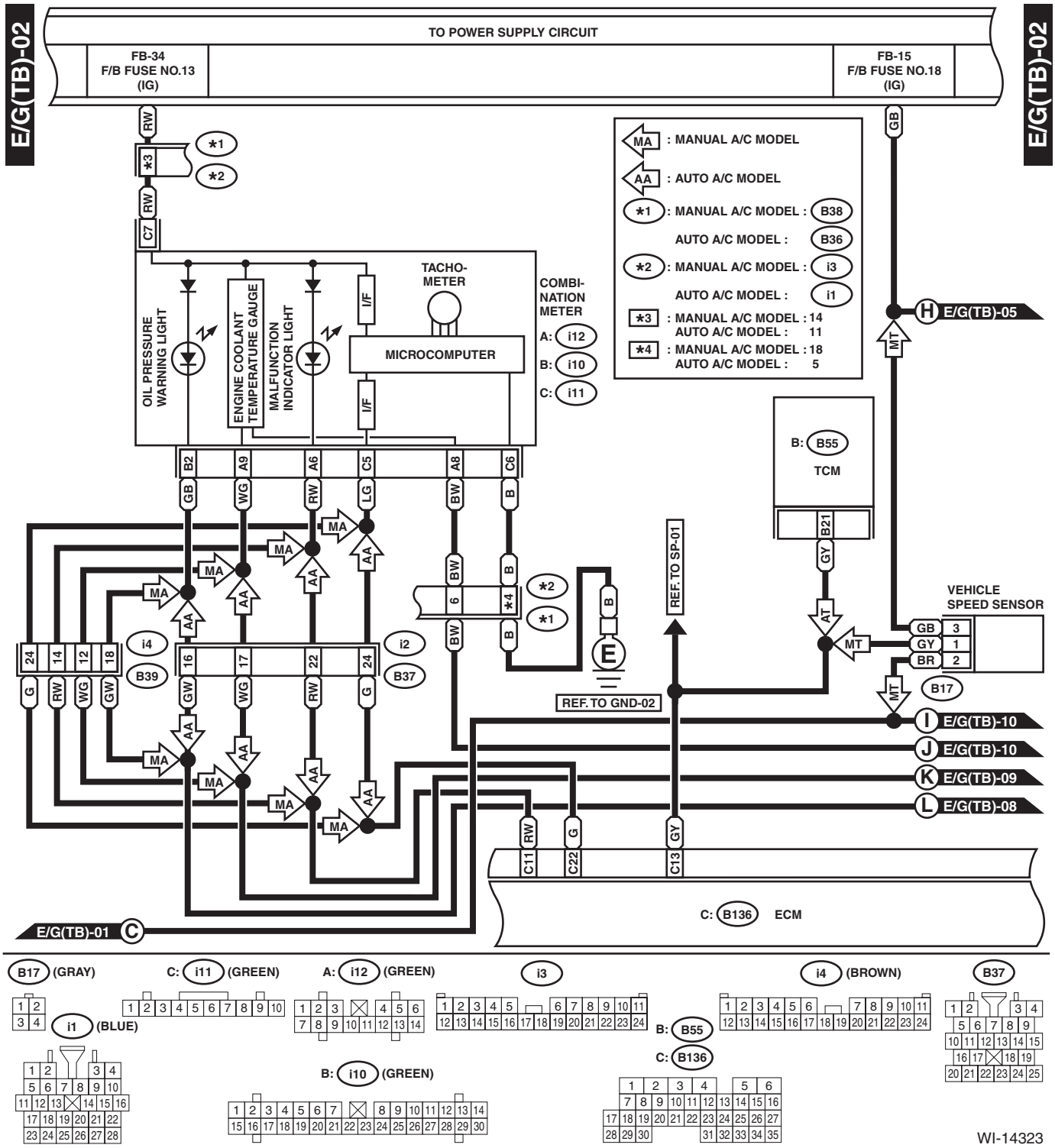
E/G(TB)-02
TO POWER SUPPLY CIRCUIT
FB-34
F/B FUSE NO.13
(IG)
FB-15
F/B FUSE NO.18
(IG)
MA : MANUAL A/C MODEL
AA : AUTO A/C MODEL
*1 : MANUAL A/C MODEL : B38
AUTO A/C MODEL : B36
*2 : MANUAL A/C MODEL : i3
AUTO A/C MODEL : i1
*3 : MANUAL A/C MODEL : 14
AUTO A/C MODEL : 11
*4 : MANUAL A/C MODEL : 18
AUTO A/C MODEL : 5
TACHO-METER
COMBI-NATION METER
A: i12
B: i10
C: i11
OIL PRESSURE WARNING LIGHT
ENGINE COOLANT TEMPERATURE GAUGE
MALFUNCTION INDICATOR LIGHT
I/F
MICROCOMPUTER
B: B55
TCM
VEHICLE SPEED SENSOR
REF. TO SP-01
REF. TO GND-02
H E/G(TB)-05
I E/G(TB)-10
J E/G(TB)-10
K E/G(TB)-09
L E/G(TB)-08
C: B136 ECM
E/G(TB)-01 C
B17 (GRAY)
C: i11 (GREEN)
A: i12 (GREEN)
i3
i4 (BROWN)
B37
i1 (BLUE)
B: i10 (GREEN)
B: B55
C: B136
WI-14323

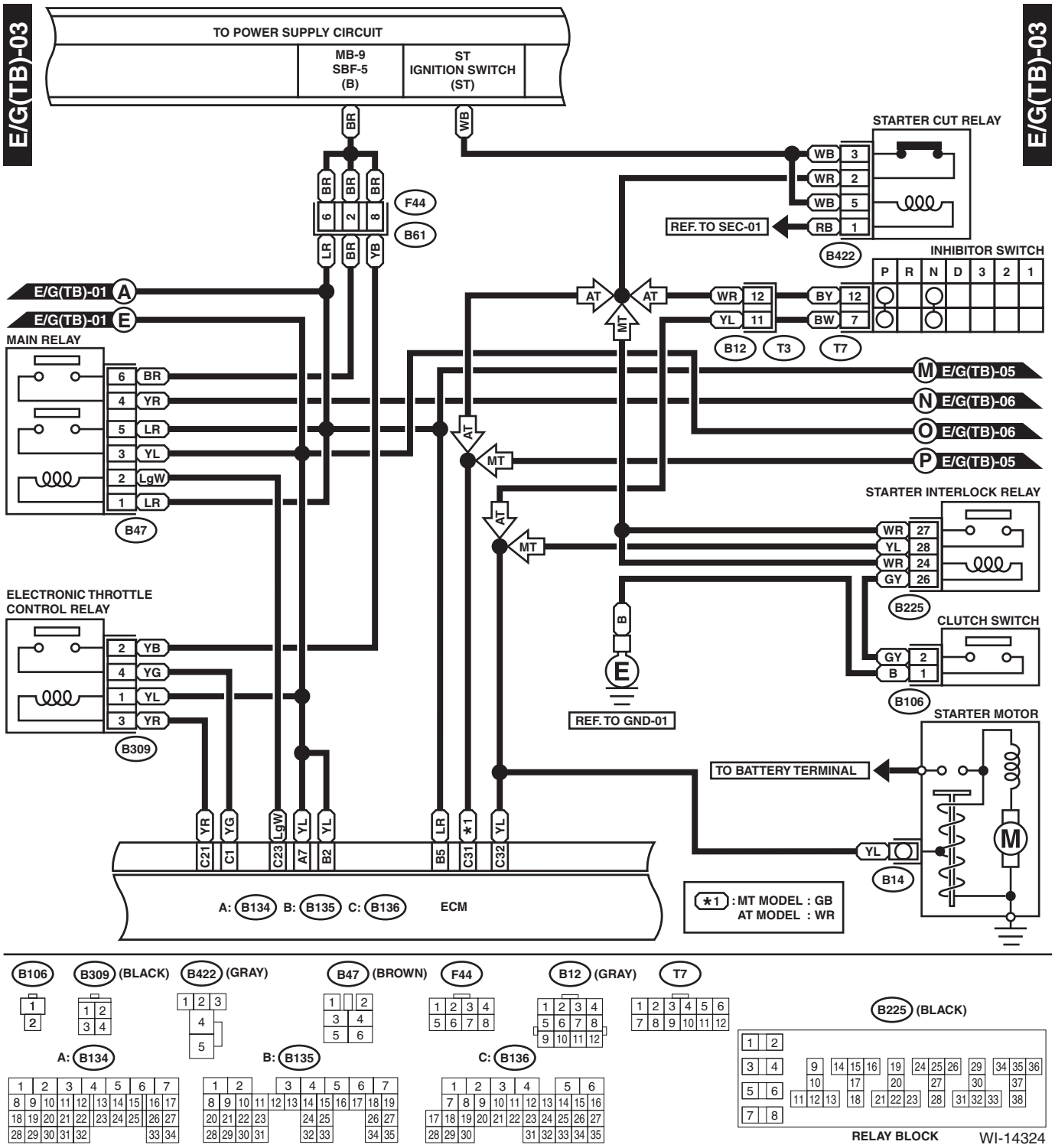
E/G(TB)-03
TO POWER SUPPLY CIRCUIT
MB-9
SBF-5
(B)
ST
IGNITION SWITCH
(ST)
STARTER CUT RELAY
REF. TO SEC-01
B422
INHIBITOR SWITCH
P R N D 3 2 1
F44
B61
E/G(TB)-01 A
E/G(TB)-01 E
MAIN RELAY
B47
B12
T3
T7
E/G(TB)-05
E/G(TB)-06
STARTER INTERLOCK RELAY
B225
CLUTCH SWITCH
B106
ELECTRONIC THROTTLE
CONTROL RELAY
B309
REF. TO GND-01
STARTER MOTOR
TO BATTERY TERMINAL
B14
A: B134 B: B135 C: B136
ECM
*1 : MT MODEL : GB
AT MODEL : WR
B106
B309 (BLACK)
B422 (GRAY)
B47 (BROWN)
F44
B12 (GRAY)
T7
B225 (BLACK)
RELAY BLOCK
WI-14324

E/G(TB)-04

E/G(TB)-04

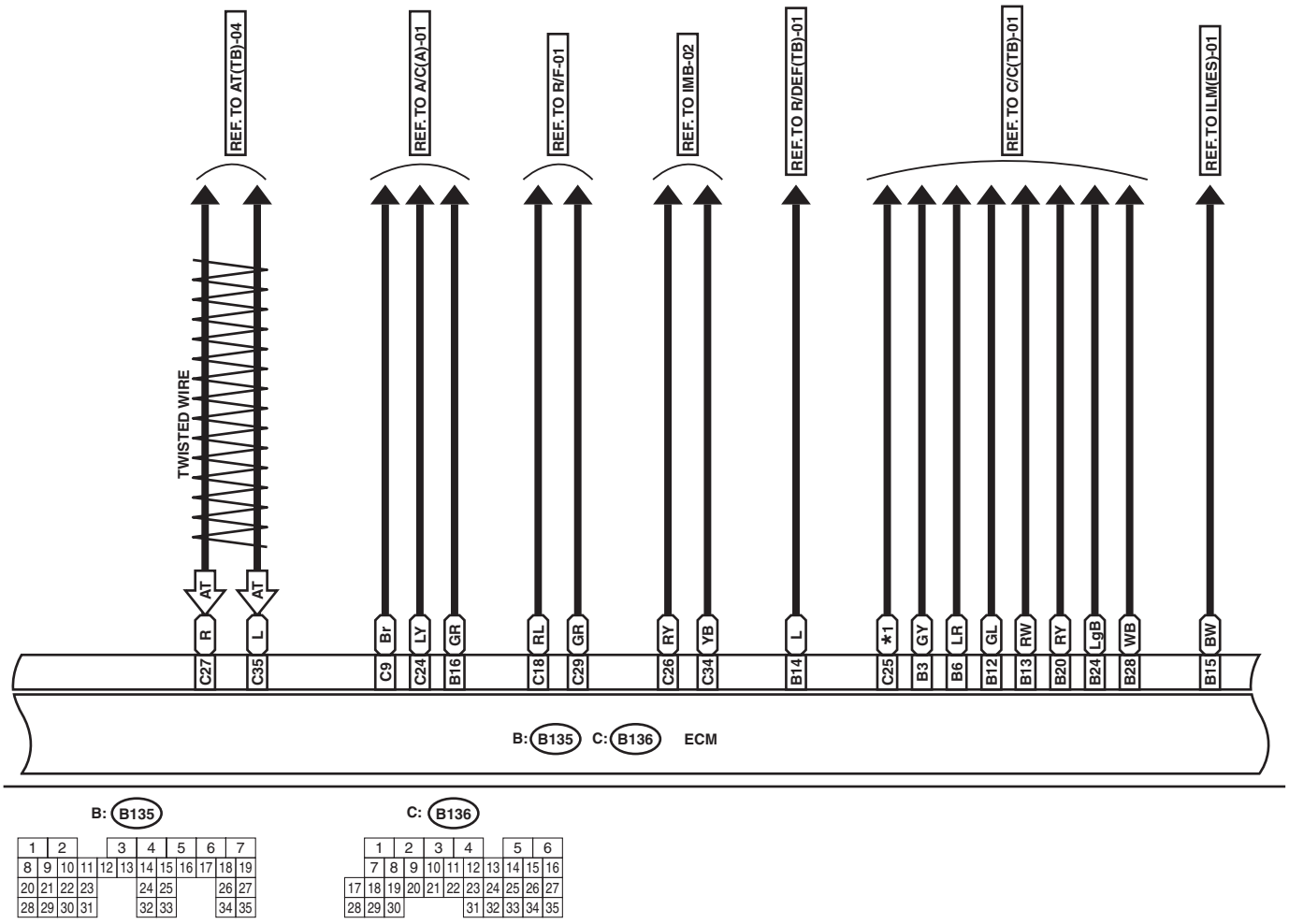

WI-14325

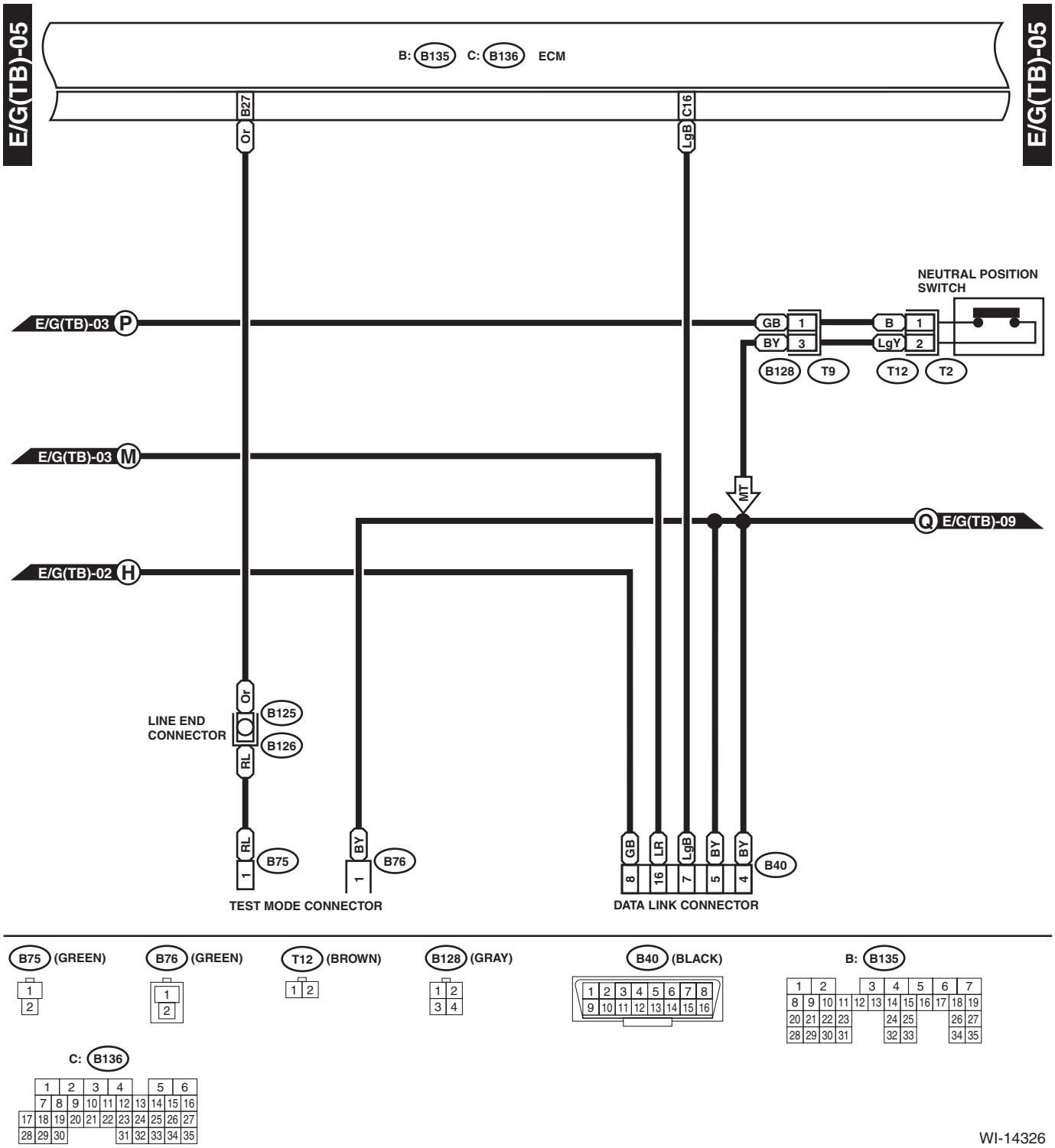
E/G(TB)-05
B: B135 C: B136 ECM
B27
Or
C16
LgB
NEUTRAL POSITION SWITCH
E/G(TB)-03 P
GB 1
BY 3
B 1
LgY 2
B128 T9 T12 T2
E/G(TB)-03 M
MT
Q E/G(TB)-09
E/G(TB)-02 H
LINE END CONNECTOR
Or
RL
B125
B126
RL
1
B75
BY
1
B76
GB
LR
LgB
BY
BY
8 16 7 5 4
B40
TEST MODE CONNECTOR
DATA LINK CONNECTOR
B75 (GREEN)
B76 (GREEN)
T12 (BROWN)
B128 (GRAY)
B40 (BLACK)
B: B135
C: B136
WI-14326

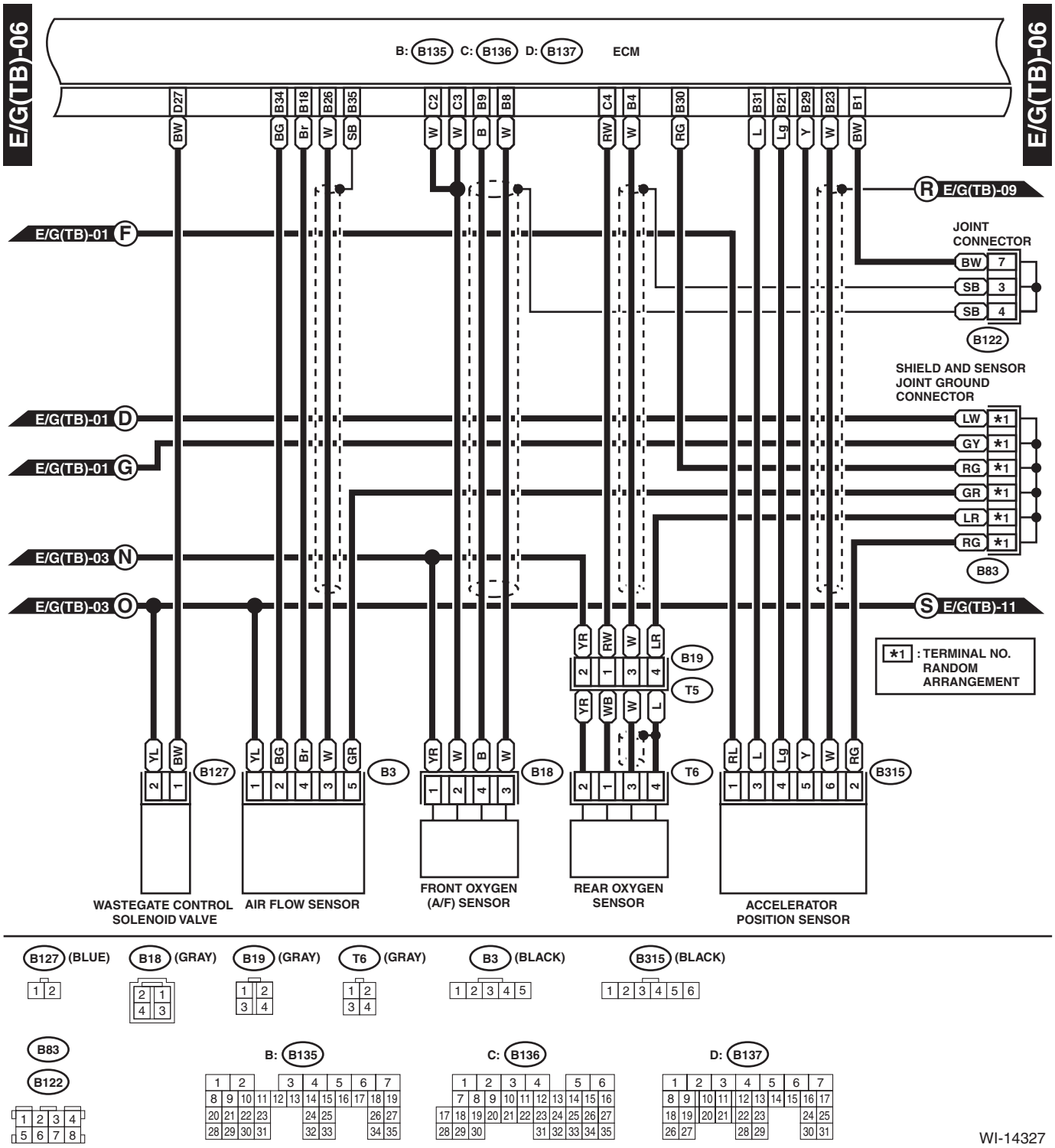
E/G(TB)-06
B: B135 C: B136 D: B137 ECM
D27 BW
B34 BG
B18 Br
B26 W
B35 SB
C2 W
C3 W
B9 B
B8 W
C4 RW
B4 W
B30 RG
B31 L
B21 Lg
B29 Y
B23 W
B1 BW
E/G(TB)-09
E/G(TB)-01 F
JOINT CONNECTOR
BW 7
SB 3
SB 4
B122
SHIELD AND SENSOR JOINT GROUND CONNECTOR
E/G(TB)-01 D
E/G(TB)-01 G
LW *1
GY *1
RG *1
GR *1
LR *1
RG *1
B83
E/G(TB)-03 N
E/G(TB)-03 O
E/G(TB)-11
YR RW W LR
B19
T5
YR WB W L
*1 : TERMINAL NO. RANDOM ARRANGEMENT
YL BW
B127
YL BG Br W GR
B3
YR W B W
B18
T6
RL L Lg Y W RG
B315
WASTEGATE CONTROL SOLENOID VALVE
AIR FLOW SENSOR
FRONT OXYGEN (A/F) SENSOR
REAR OXYGEN SENSOR
ACCELERATOR POSITION SENSOR
B127 (BLUE)
B18 (GRAY)
B19 (GRAY)
T6 (GRAY)
B3 (BLACK)
B315 (BLACK)
B83
B122
B: B135
C: B136
D: B137
WI-14327

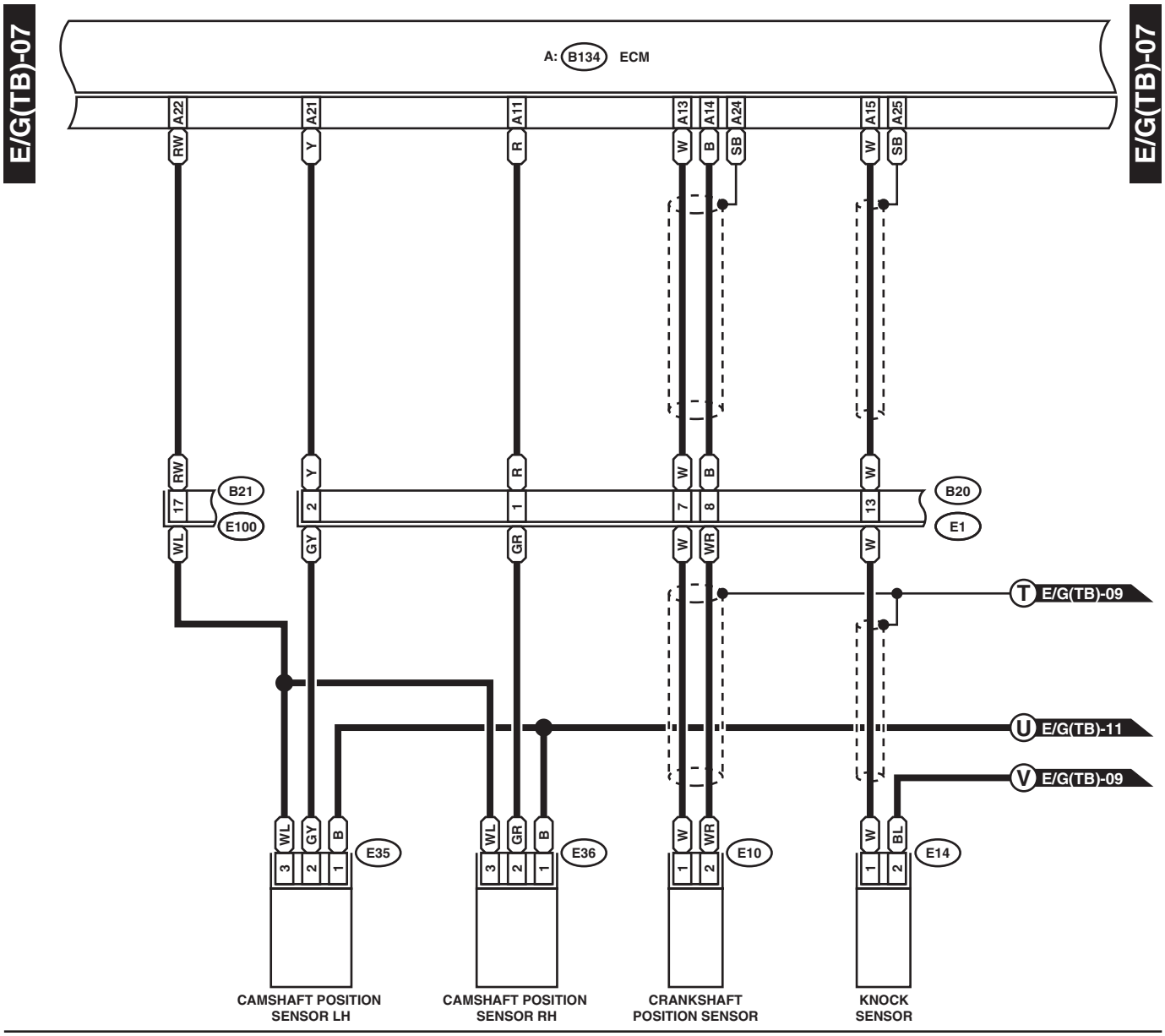
E/G(TB)-07
A: B134 ECM
A22
A21
A11
A13
A14
A24
A15
A25
RW
Y
R
W
B
SB
W
SB
B21
E100
B20
E1
17
2
1
7
8
13
WL
GY
GR
W
WR
W
T E/G(TB)-09
U E/G(TB)-11
V E/G(TB)-09
WL
GY
B
E35
WL
GR
B
E36
W
WR
E10
W
BL
E14
CAMSHAFT POSITION SENSOR LH
CAMSHAFT POSITION SENSOR RH
CRANKSHAFT POSITION SENSOR
KNOCK SENSOR
E10 (LIGHT GRAY)
E14 (LIGHT GRAY)
E35 (LIGHT GRAY)
E36 (LIGHT GRAY)
B20 (BROWN)
A: B134
B21 (BLACK)
WI-14328

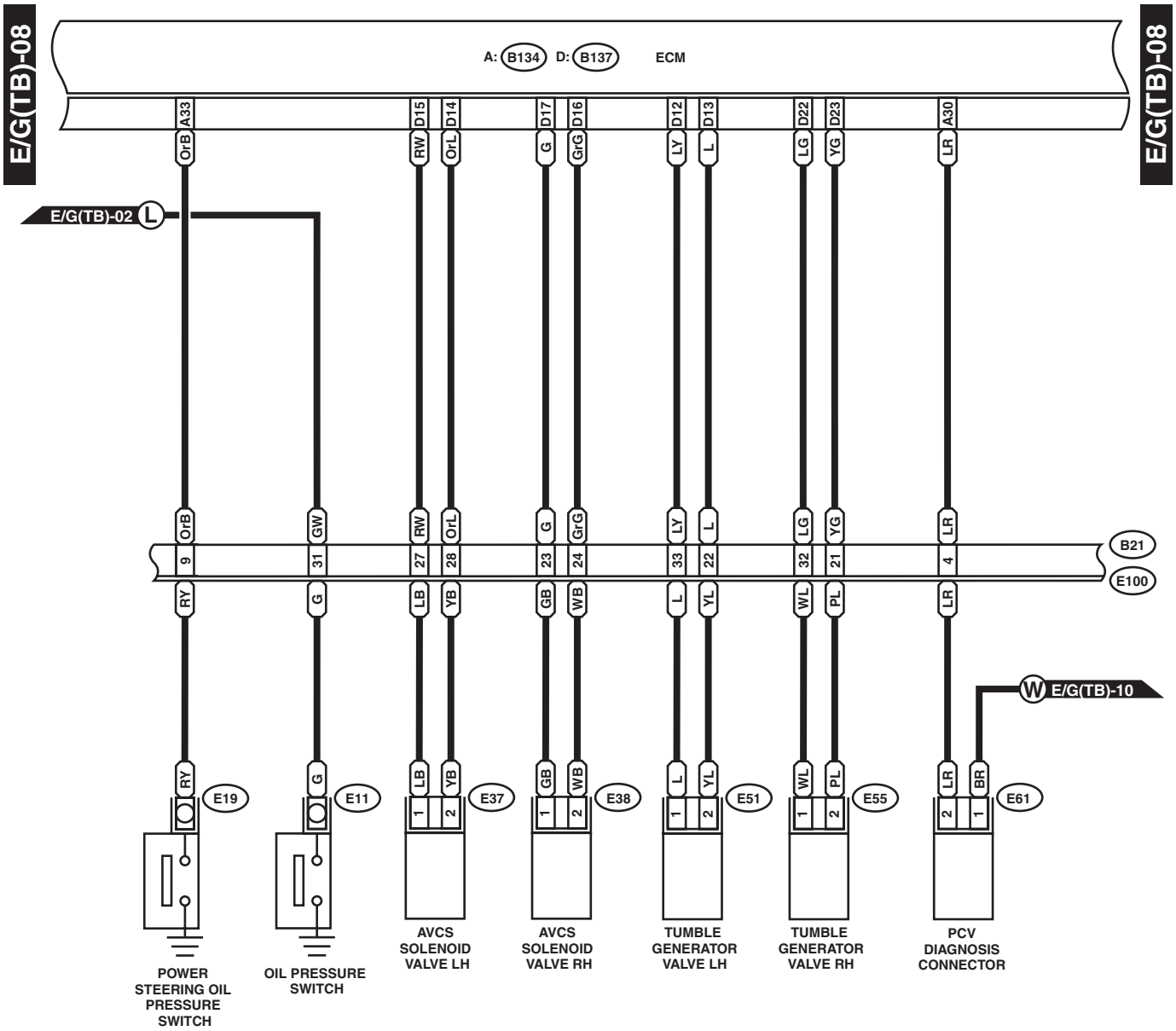
E/G(TB)-08
E/G(TB)-08
A: B134 D: B137
ECM
A33
D15
D14
D17
D16
D12
D13
D22
D23
A30
OrB
RW
OrL
G
GrG
LY
L
LG
YG
LR
E/G(TB)-02 L
OrB
GW
RW
OrL
G
GrG
LY
L
LG
YG
LR
9
31
27
28
23
24
33
22
32
21
4
B21
E100
RY
G
LB
YB
GB
WB
L
YL
WL
PL
LR
W E/G(TB)-10
RY
E19
G
E11
LB
YB
E37
GB
WB
E38
L
YL
E51
WL
PL
E55
LR
BR
E61
POWER STEERING OIL PRESSURE SWITCH
OIL PRESSURE SWITCH
AVCS SOLENOID VALVE LH
AVCS SOLENOID VALVE RH
TUMBLE GENERATOR VALVE LH
TUMBLE GENERATOR VALVE RH
PCV DIAGNOSIS CONNECTOR
E37 (BLUE)
E38 (BLUE)
E51 (BLACK)
E55 (BLACK)
E61 (DARK GRAY)
D: B137
A: B134
B21 (BLACK)
WI-14329

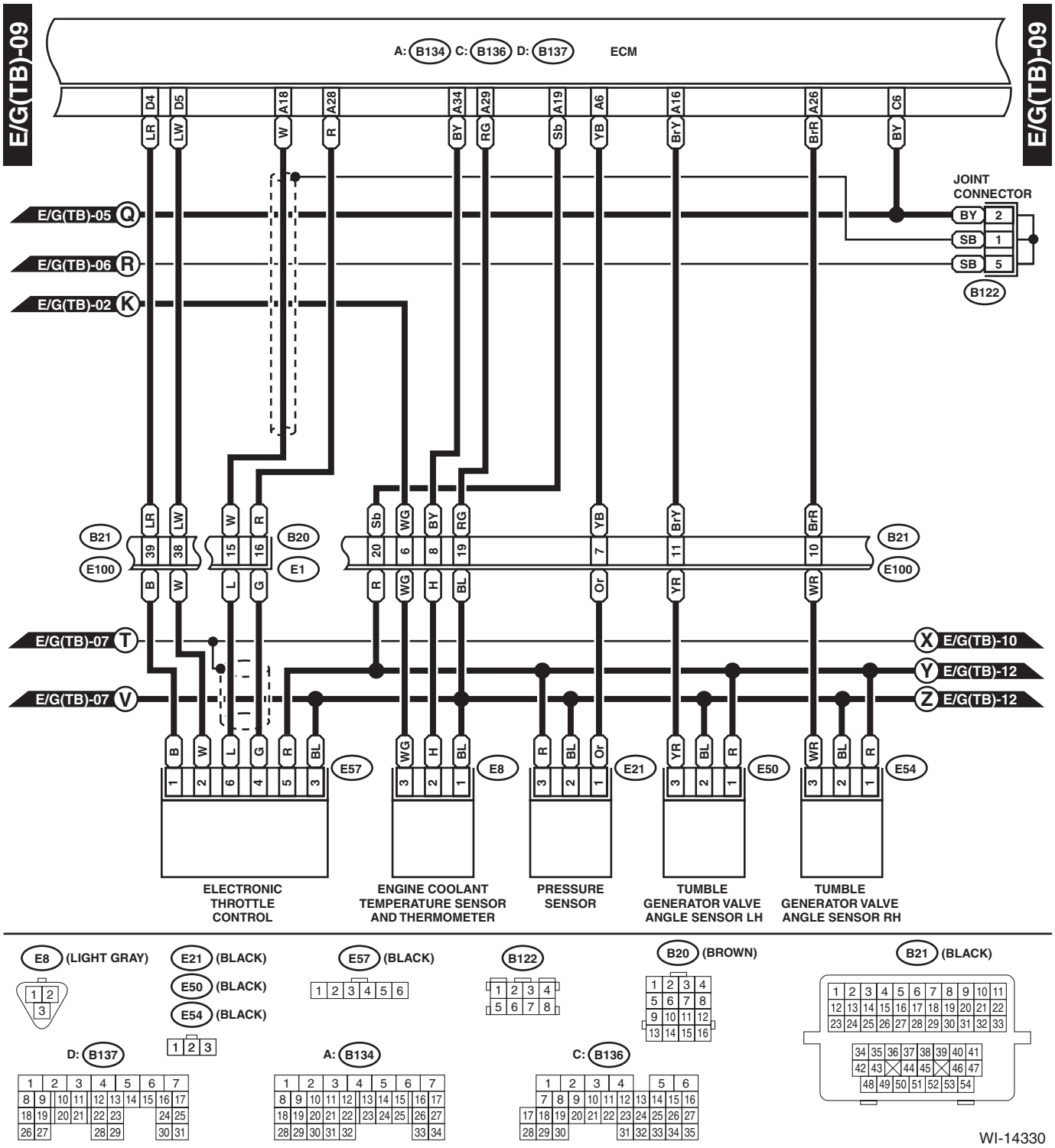
E/G(TB)-09
A: B134 C: B136 D: B137
ECM
D4 D5 A18 A28 A34 A29 A19 A6 A16 A26 C6
LR LW W R BY RG Sb YB BrY BrR BY
JOINT CONNECTOR
BY 2
SB 1
SB 5
B122
E/G(TB)-05 Q
E/G(TB)-06 R
E/G(TB)-02 K
B21
E100
39 38 15 16 20 6 8 19 7 11 10
B20
E1
B B W L G R WG H BL Or YR WR
E/G(TB)-07 T
E/G(TB)-07 V
E/G(TB)-10 X
E/G(TB)-12 Y
E/G(TB)-12 Z
E57
E8
E21
E50
E54
ELECTRONIC THROTTLE CONTROL
ENGINE COOLANT TEMPERATURE SENSOR AND THERMOMETER
PRESSURE SENSOR
TUMBLE GENERATOR VALVE ANGLE SENSOR LH
TUMBLE GENERATOR VALVE ANGLE SENSOR RH
E8 (LIGHT GRAY)
E21 (BLACK)
E50 (BLACK)
E54 (BLACK)
E57 (BLACK)
B122
B20 (BROWN)
B21 (BLACK)
D: B137
A: B134
C: B136
WI-14330

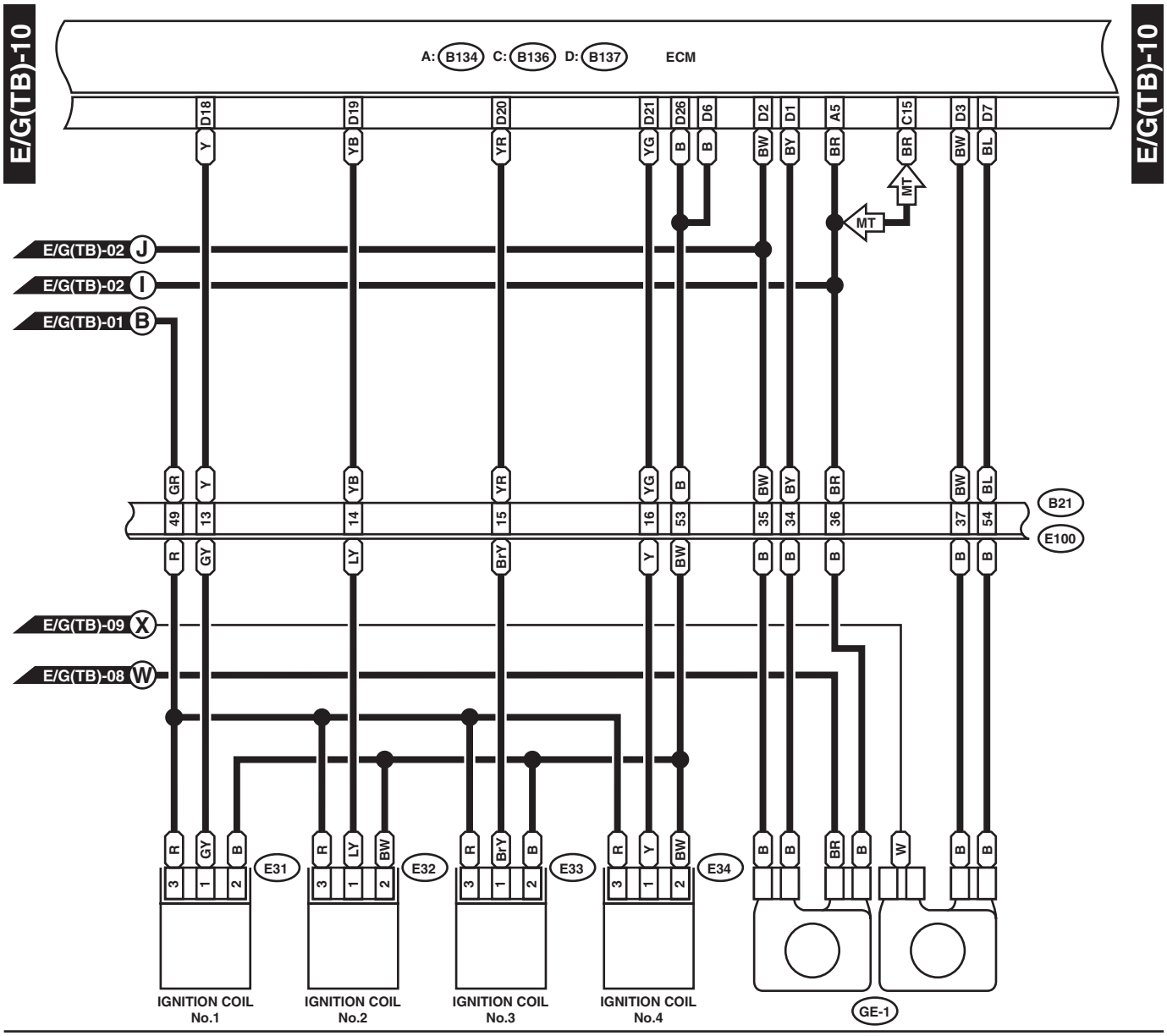
E/G(TB)-10
A: B134 C: B136 D: B137
ECM
D18 D19 D20 D21 D26 D6 D2 D1 A5 C15 D3 D7
Y YB YR YG B B BW BY BR BR BW BL
MT
E/G(TB)-02 J
E/G(TB)-02 I
E/G(TB)-01 B
GR Y YB YR YG B BW BY BR BW BL
49 13 14 15 16 53 35 34 36 37 54
B21
E100
R GY LY BrY Y BW B B B B B
E/G(TB)-09 X
E/G(TB)-08 W
R GY B
R LY BW
R BrY B
R Y BW
B B BR B W B B
E31
E32
E33
E34
IGNITION COIL No.1
IGNITION COIL No.2
IGNITION COIL No.3
IGNITION COIL No.4
GE-1
E31 (WHITE)
E32 (WHITE)
E33 (BLACK)
E34 (BLACK)
D: B137
A: B134
C: B136
B21 (BLACK)
WI-14331

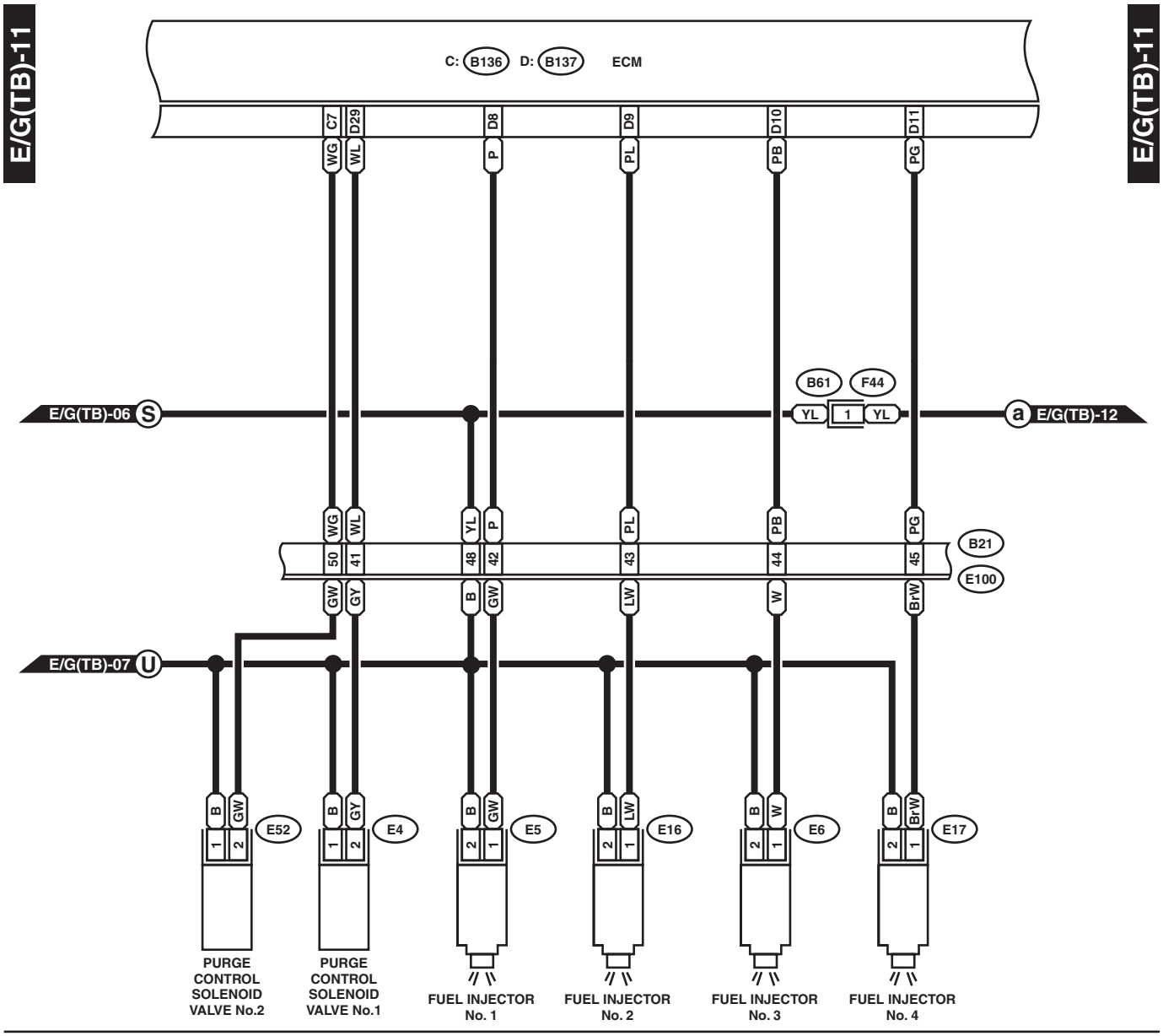
E/G(TB)-11
E/G(TB)-11
C: B136 D: B137 ECM
C7 D29 D8 D9 D10 D11
WG WL P PL PB PG
B61 F44
E/G(TB)-06 S
YL 1 YL
a E/G(TB)-12
WG WL YL P PL PB PG
50 41 48 42 43 44 45
B21
E100
GW GY B GW LW W Br·W
E/G(TB)-07 U
B GW B GY B GW B LW B W B Br·W
E52 E4 E5 E16 E6 E17
PURGE CONTROL SOLENOID VALVE No.2
PURGE CONTROL SOLENOID VALVE No.1
FUEL INJECTOR No. 1
FUEL INJECTOR No. 2
FUEL INJECTOR No. 3
FUEL INJECTOR No. 4

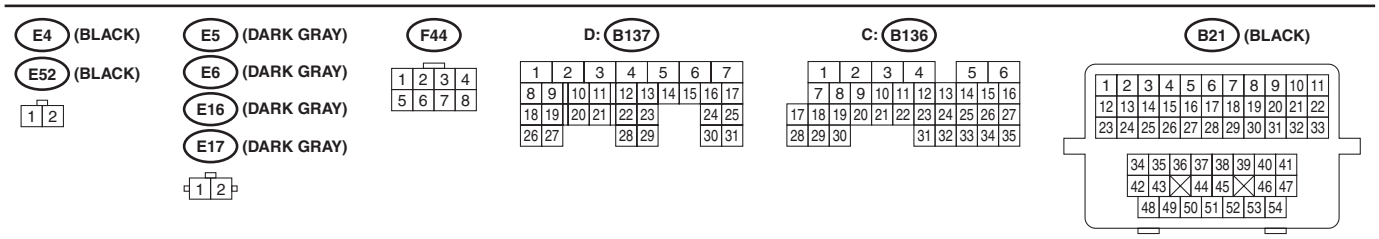
E4 (BLACK)
E52 (BLACK)
E5 (DARK GRAY)
E6 (DARK GRAY)
E16 (DARK GRAY)
E17 (DARK GRAY)
F44
D: B137
C: B136
B21 (BLACK)

WI-14332

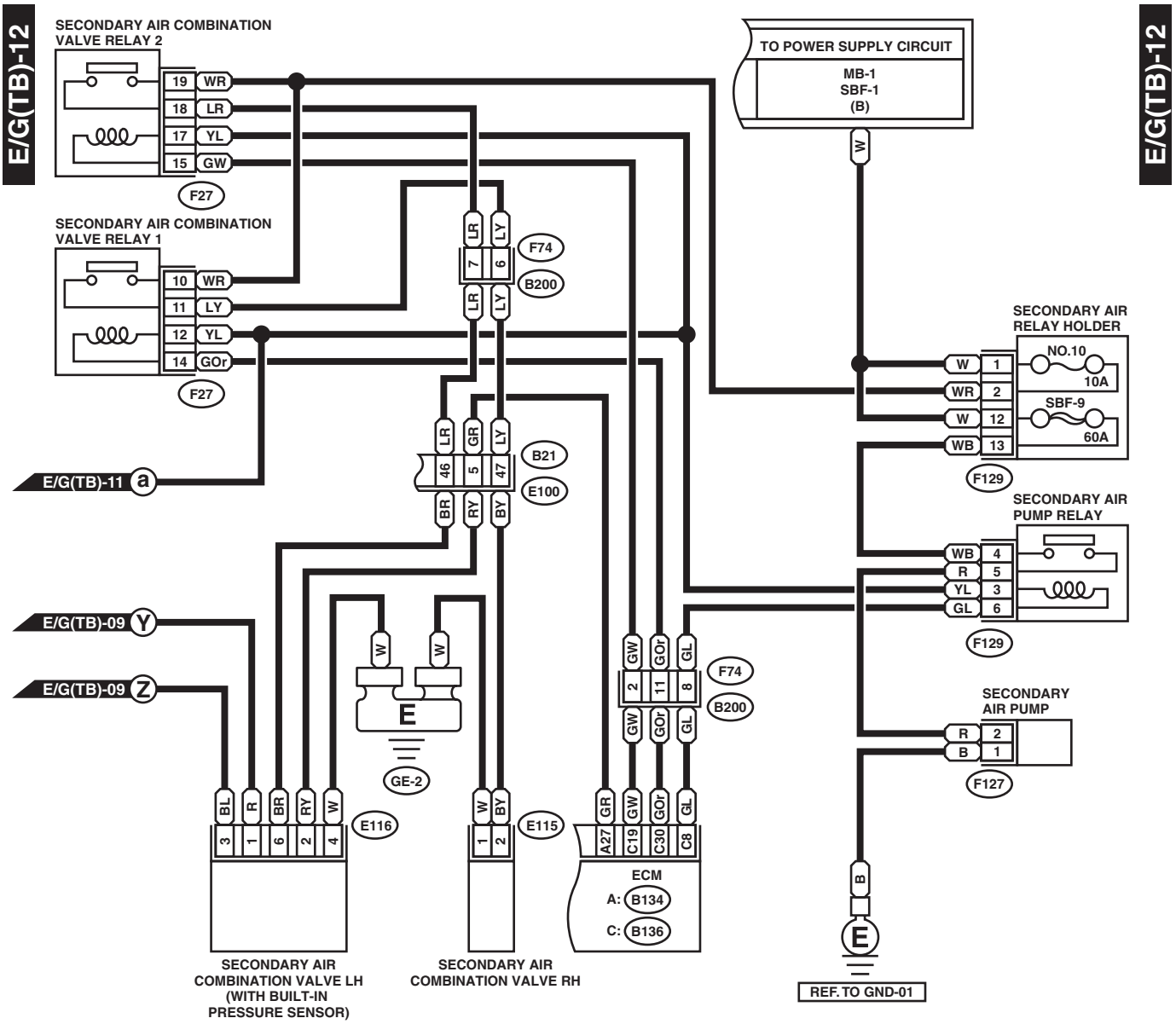
E/G(TB)-12
SECONDARY AIR COMBINATION VALVE RELAY 2
19 WR
18 LR
17 YL
15 GW
F27
SECONDARY AIR COMBINATION VALVE RELAY 1
10 WR
11 LY
12 YL
14 GOr
F27
TO POWER SUPPLY CIRCUIT
MB-1
SBF-1
(B)
W
F74
B200
SECONDARY AIR RELAY HOLDER
NO.10
10A
SBF-9
60A
F129
SECONDARY AIR PUMP RELAY
F129
SECONDARY AIR PUMP
F127
E/G(TB)-11 a
B21
E100
E/G(TB)-09 Y
E/G(TB)-09 Z
GE-2
E116
E115
ECM
A: B134
C: B136
REF. TO GND-01
SECONDARY AIR COMBINATION VALVE LH (WITH BUILT-IN PRESSURE SENSOR)
SECONDARY AIR COMBINATION VALVE RH
F127 (GRAY)
E115 (BLACK)
E116 (BLACK)
F129 (BLACK)
SECONDARY AIR RELAY HOLDER
F74 (BLUE)
A: B134
C: B136
F27 (BLACK)
RELAY HOLDER
B21 (BLACK)
WI-14333

3. STI MODEL

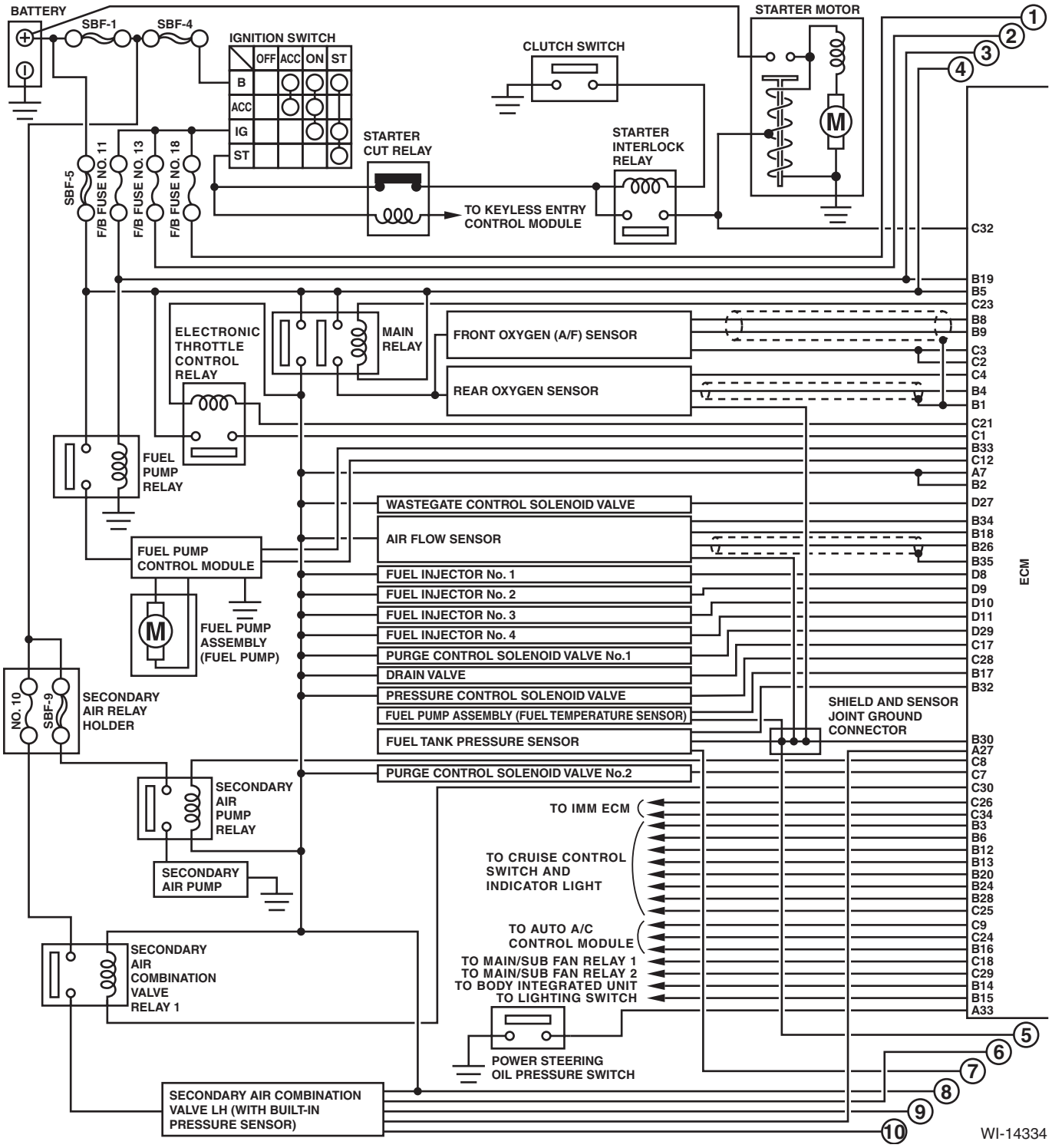
BATTERY
SBF-1
SBF-4
IGNITION SWITCH
OFF
ACC
ON
ST
B
ACC
IG
ST
CLUTCH SWITCH
STARTER MOTOR
STARTER CUT RELAY
STARTER INTERLOCK RELAY
TO KEYLESS ENTRY CONTROL MODULE
SBF-5
F/B FUSE NO. 11
F/B FUSE NO. 13
F/B FUSE NO. 18
ELECTRONIC THROTTLE CONTROL RELAY
MAIN RELAY
FRONT OXYGEN (A/F) SENSOR
REAR OXYGEN SENSOR
FUEL PUMP RELAY
WASTEGATE CONTROL SOLENOID VALVE
AIR FLOW SENSOR
FUEL PUMP CONTROL MODULE
FUEL INJECTOR No. 1
FUEL INJECTOR No. 2
FUEL INJECTOR No. 3
FUEL INJECTOR No. 4
PURGE CONTROL SOLENOID VALVE No.1
DRAIN VALVE
PRESSURE CONTROL SOLENOID VALVE
FUEL PUMP ASSEMBLY (FUEL TEMPERATURE SENSOR)
FUEL TANK PRESSURE SENSOR
PURGE CONTROL SOLENOID VALVE No.2
FUEL PUMP ASSEMBLY (FUEL PUMP)
NO. 10
SBF-9
SECONDARY AIR RELAY HOLDER
SHIELD AND SENSOR JOINT GROUND CONNECTOR
SECONDARY AIR PUMP RELAY
SECONDARY AIR PUMP
TO IMM ECM
TO CRUISE CONTROL SWITCH AND INDICATOR LIGHT
TO AUTO A/C CONTROL MODULE
TO MAIN/SUB FAN RELAY 1
TO MAIN/SUB FAN RELAY 2
TO BODY INTEGRATED UNIT
TO LIGHTING SWITCH
SECONDARY AIR COMBINATION VALVE RELAY 1
POWER STEERING OIL PRESSURE SWITCH
SECONDARY AIR COMBINATION VALVE LH (WITH BUILT-IN PRESSURE SENSOR)
ECM
C32
B19
B5
C23
B8
B9
C3
C2
C4
B4
B1
C21
C1
B33
C12
A7
B2
D27
B34
B18
B26
B35
D8
D9
D10
D11
D29
C17
C28
B17
B32
B30
A27
C8
C7
C30
C26
C34
B3
B6
B12
B13
B20
B24
B28
C25
C9
C24
B16
C18
C29
B14
B15
A33
WI-14334

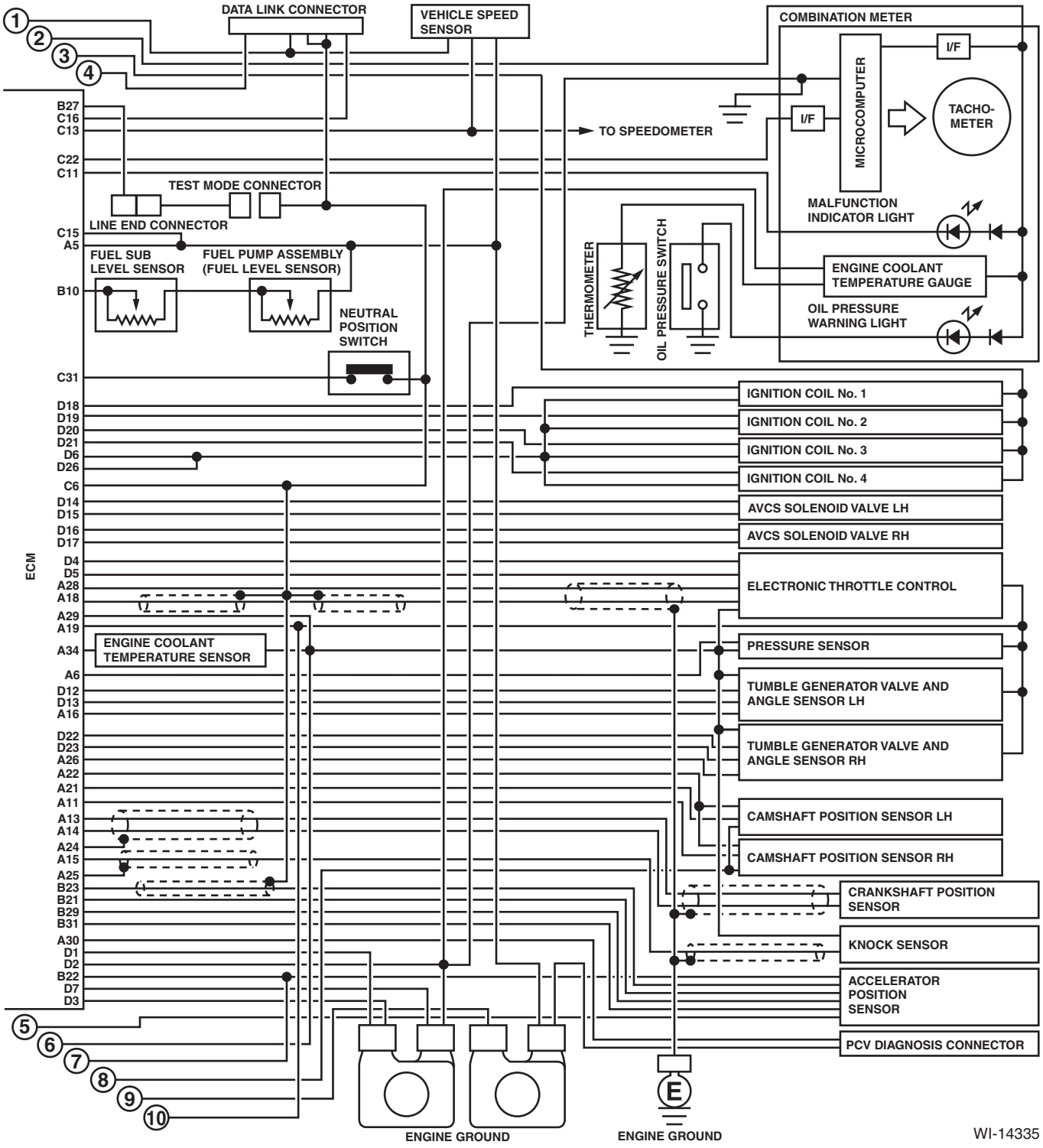
DATA LINK CONNECTOR
VEHICLE SPEED SENSOR
COMBINATION METER
I/F
MICROCOMPUTER
TACHO-METER
I/F
TO SPEEDOMETER
MALFUNCTION INDICATOR LIGHT
ENGINE COOLANT TEMPERATURE GAUGE
OIL PRESSURE WARNING LIGHT
THERMOMETER
OIL PRESSURE SWITCH
TEST MODE CONNECTOR
LINE END CONNECTOR
FUEL SUB LEVEL SENSOR
FUEL PUMP ASSEMBLY (FUEL LEVEL SENSOR)
NEUTRAL POSITION SWITCH
ECM
B27
C16
C13
C22
C11
C15
A5
B10
C31
D18
D19
D20
D21
D6
D26
C6
D14
D15
D16
D17
D4
D5
A28
A18
A29
A19
A34
A6
D12
D13
A16
D22
D23
A26
A22
A21
A11
A13
A14
A24
A15
A25
B23
B21
B29
B31
A30
D1
D2
B22
D7
D3
IGNITION COIL No. 1
IGNITION COIL No. 2
IGNITION COIL No. 3
IGNITION COIL No. 4
AVCS SOLENOID VALVE LH
AVCS SOLENOID VALVE RH
ELECTRONIC THROTTLE CONTROL
ENGINE COOLANT TEMPERATURE SENSOR
PRESSURE SENSOR
TUMBLE GENERATOR VALVE AND ANGLE SENSOR LH
TUMBLE GENERATOR VALVE AND ANGLE SENSOR RH
CAMSHAFT POSITION SENSOR LH
CAMSHAFT POSITION SENSOR RH
CRANKSHAFT POSITION SENSOR
KNOCK SENSOR
ACCELERATOR POSITION SENSOR
PCV DIAGNOSIS CONNECTOR
1
2
3
4
5
6
7
8
9
10
E
ENGINE GROUND
ENGINE GROUND
WI-14335

WIRING SYSTEM

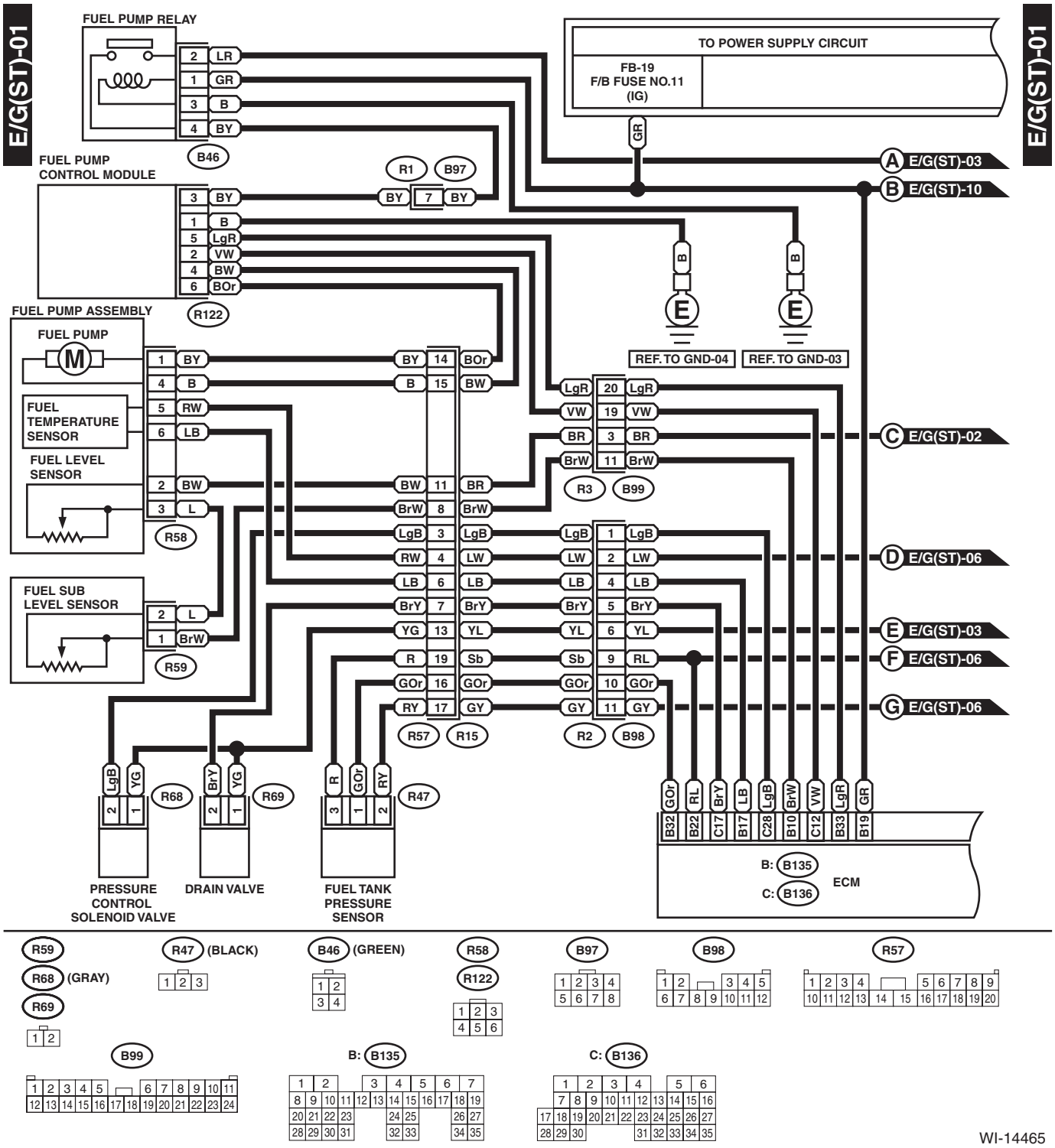

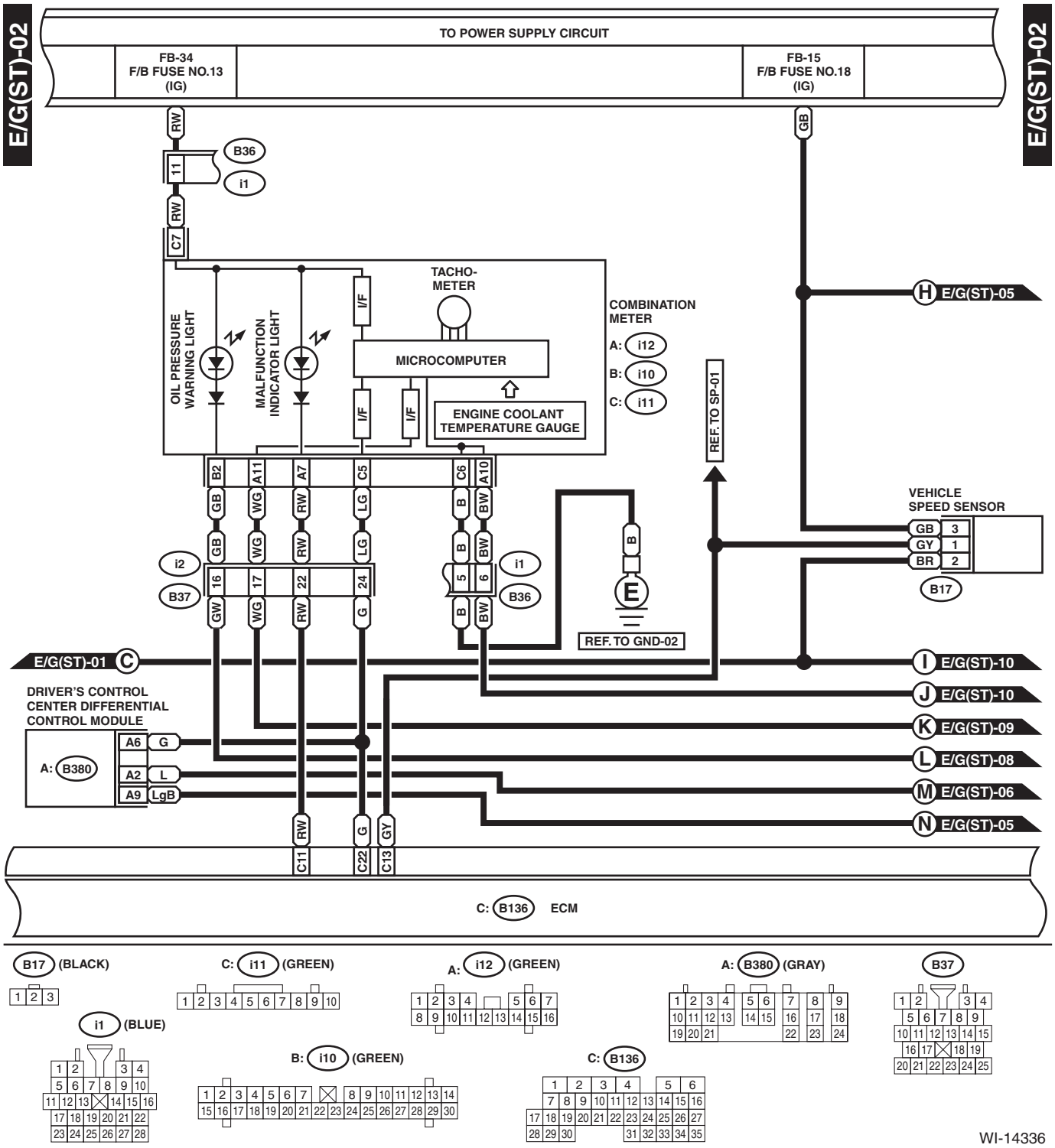
E/G(ST)-02
TO POWER SUPPLY CIRCUIT
FB-34
F/B FUSE NO.13
(IG)
FB-15
F/B FUSE NO.18
(IG)
RW
B36
11
i1
RW
C7
GB
TACHO-
METER
I/F
MICROCOMPUTER
ENGINE COOLANT
TEMPERATURE GAUGE
OIL PRESSURE
WARNING LIGHT
MALFUNCTION
INDICATOR LIGHT
COMBINATION
METER
A: i12
B: i10
C: i11
REF. TO SP-01
H E/G(ST)-05
VEHICLE
SPEED SENSOR
GB 3
GY 1
BR 2
B17
B2 A11 A7 C5 C6 A10
GB WG RW LG B BW
i2
B37
16 17 22 24
5 6
i1
B36
GW WG RW G B BW
E
REF. TO GND-02
E/G(ST)-01 C
I E/G(ST)-10
J E/G(ST)-10
K E/G(ST)-09
L E/G(ST)-08
M E/G(ST)-06
N E/G(ST)-05
DRIVER'S CONTROL
CENTER DIFFERENTIAL
CONTROL MODULE
A: B380
A6 G
A2 L
A9 LgB
RW G GY
C11 C22 C13
C: B136 ECM
B17 (BLACK)
C: i11 (GREEN)
A: i12 (GREEN)
A: B380 (GRAY)
B37
i1 (BLUE)
B: i10 (GREEN)
C: B136
WI-14336

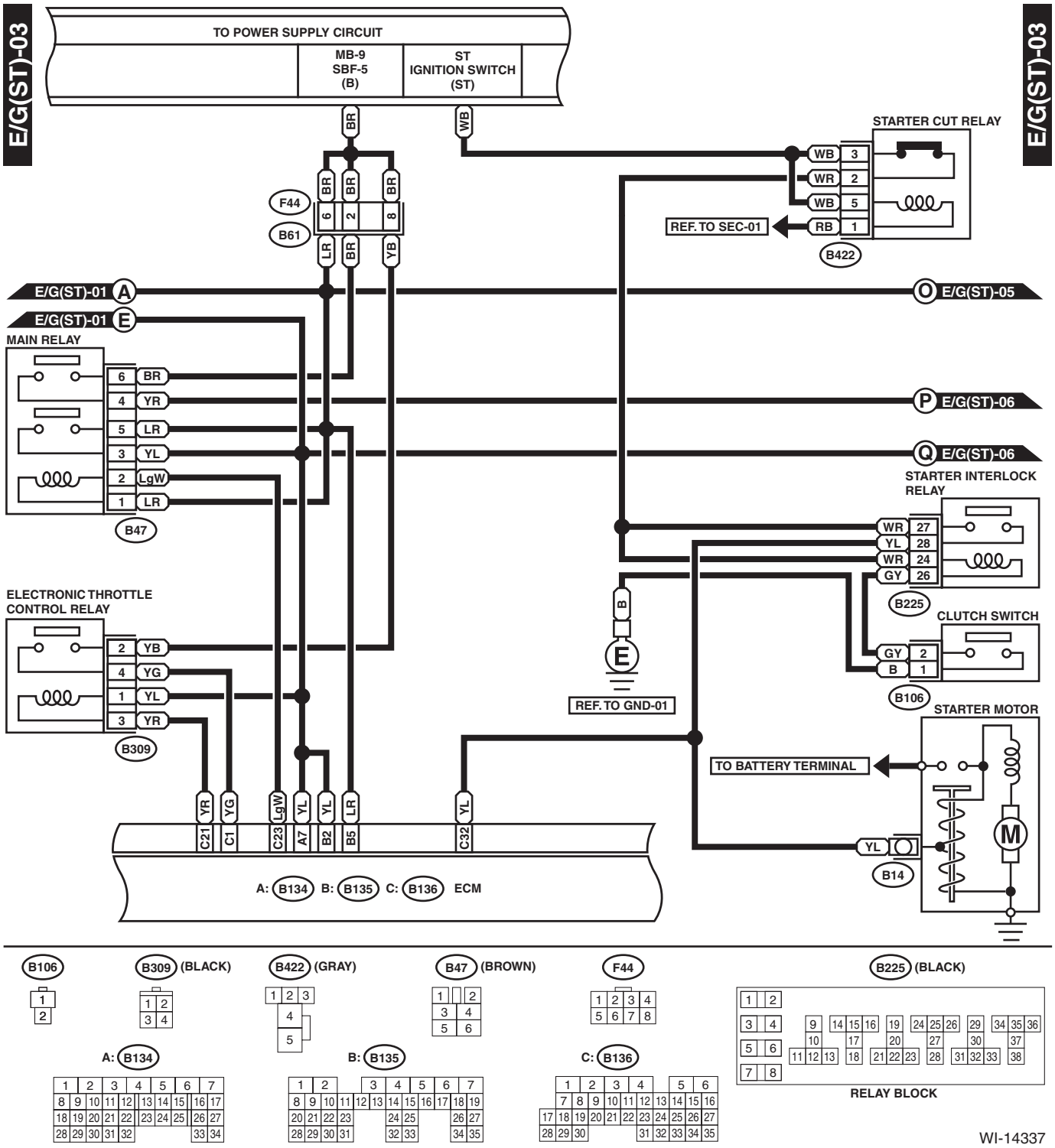
E/G(ST)-03
TO POWER SUPPLY CIRCUIT
MB-9
SBF-5
(B)
ST
IGNITION SWITCH
(ST)
STARTER CUT RELAY
REF. TO SEC-01
B422
F44
B61
E/G(ST)-01 A
E/G(ST)-01 E
E/G(ST)-05 O
E/G(ST)-06 P
E/G(ST)-06 Q
MAIN RELAY
B47
STARTER INTERLOCK RELAY
B225
CLUTCH SWITCH
B106
ELECTRONIC THROTTLE CONTROL RELAY
B309
REF. TO GND-01
STARTER MOTOR
TO BATTERY TERMINAL
B14
A: B134 B: B135 C: B136 ECM
B106
B309 (BLACK)
B422 (GRAY)
B47 (BROWN)
F44
B225 (BLACK)
RELAY BLOCK
A: B134
B: B135
C: B136
WI-14337

E/G(ST)-04

E/G(ST)-04

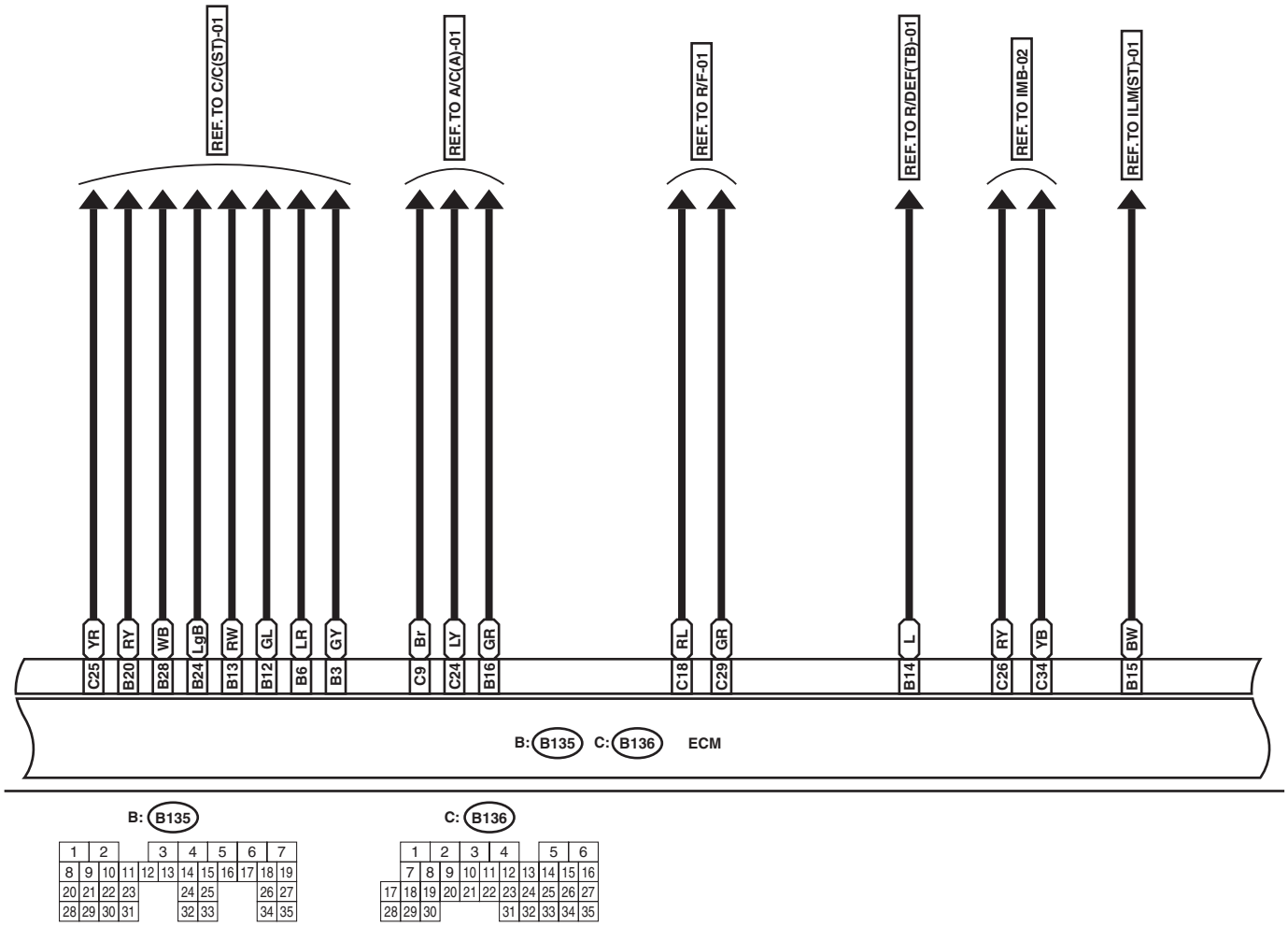

WI-14338

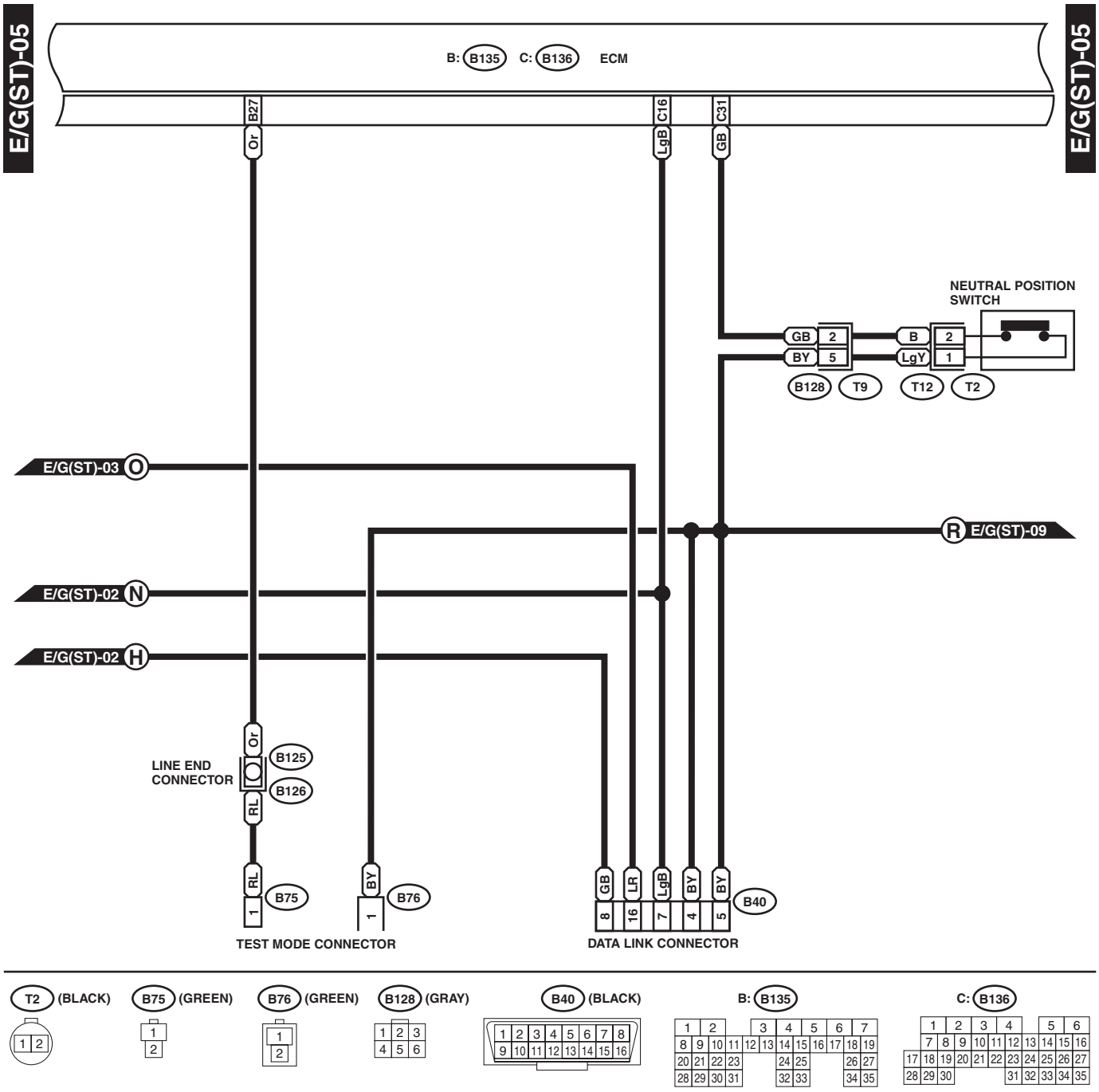
E/G(ST)-05
B: B135 C: B136 ECM
B27
C16
C31
Or
LgB
GB
NEUTRAL POSITION SWITCH
GB 2
BY 5
B 2
LgY 1
B128 T9 T12 T2
E/G(ST)-03 O
R E/G(ST)-09
E/G(ST)-02 N
E/G(ST)-02 H
LINE END CONNECTOR
Or
RL
B125
B126
RL 1
B75
BY 1
B76
TEST MODE CONNECTOR
GB 8
LR 16
LgB 7
BY 4
BY 5
B40
DATA LINK CONNECTOR
T2 (BLACK)
B75 (GREEN)
B76 (GREEN)
B128 (GRAY)
B40 (BLACK)
B: B135
C: B136

WI-14339

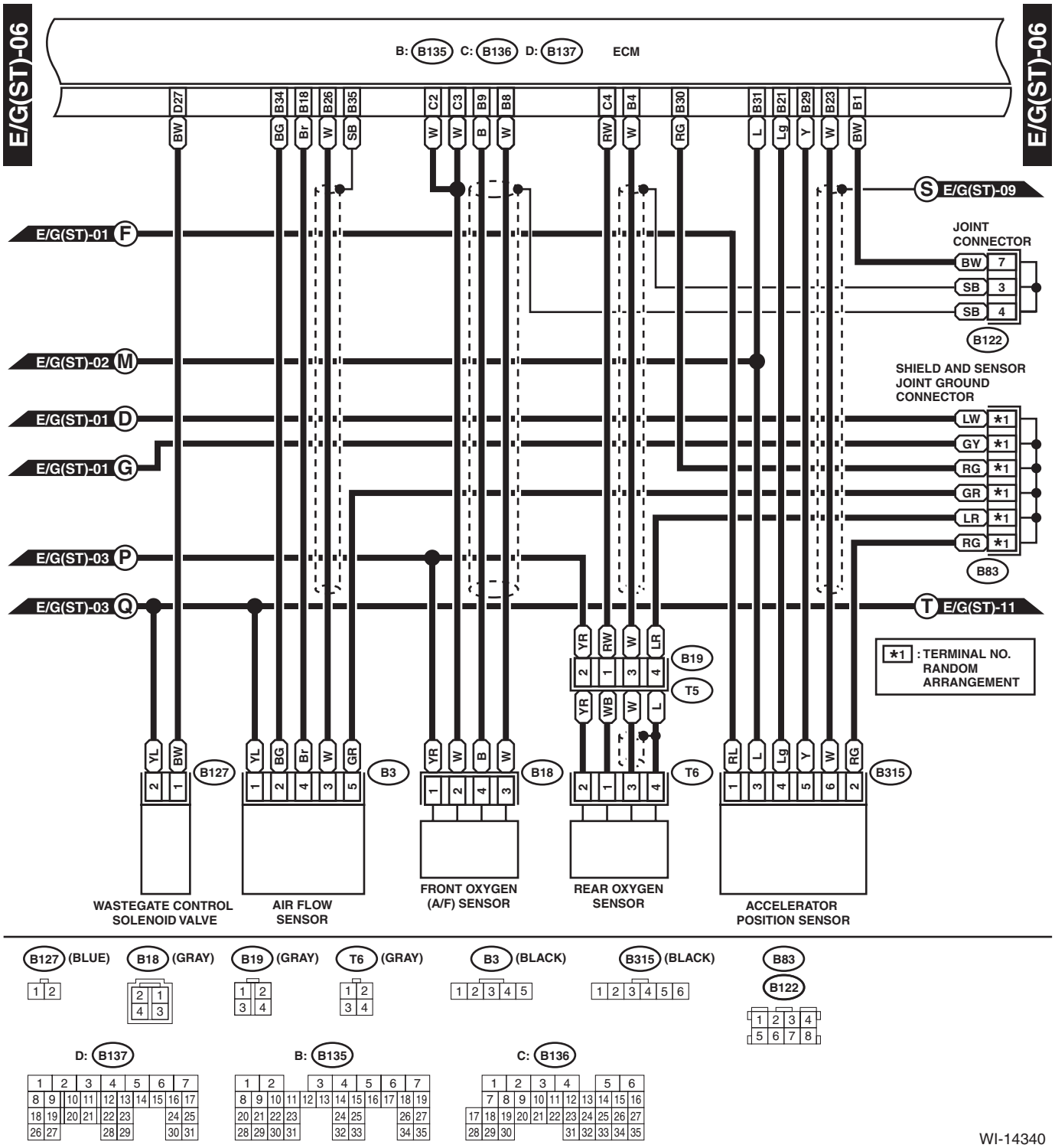
E/G(ST)-06
B: B135 C: B136 D: B137 ECM
D27 BW
B34 BG
B18 Br
B26 W
B35 SB
C2 W
C3 W
B9 B
B8 W
C4 RW
B4 W
B30 RG
B31 L
B21 Lg
B29 Y
B23 W
B1 BW
S E/G(ST)-09
E/G(ST)-01 F
JOINT CONNECTOR
BW 7
SB 3
SB 4
B122
E/G(ST)-02 M
SHIELD AND SENSOR JOINT GROUND CONNECTOR
E/G(ST)-01 D
LW *1
GY *1
RG *1
GR *1
LR *1
RG *1
E/G(ST)-01 G
B83
E/G(ST)-03 P
E/G(ST)-03 Q
T E/G(ST)-11
YR RW W LR
B19
T5
YR WB W L
*1 : TERMINAL NO. RANDOM ARRANGEMENT
YL BW
B127
YL BG Br W GR
B3
YR W B W
B18
T6
RL L Lg Y W RG
B315
WASTEGATE CONTROL SOLENOID VALVE
AIR FLOW SENSOR
FRONT OXYGEN (A/F) SENSOR
REAR OXYGEN SENSOR
ACCELERATOR POSITION SENSOR
B127 (BLUE)
B18 (GRAY)
B19 (GRAY)
T6 (GRAY)
B3 (BLACK)
B315 (BLACK)
B83
B122
D: B137
B: B135
C: B136
WI-14340

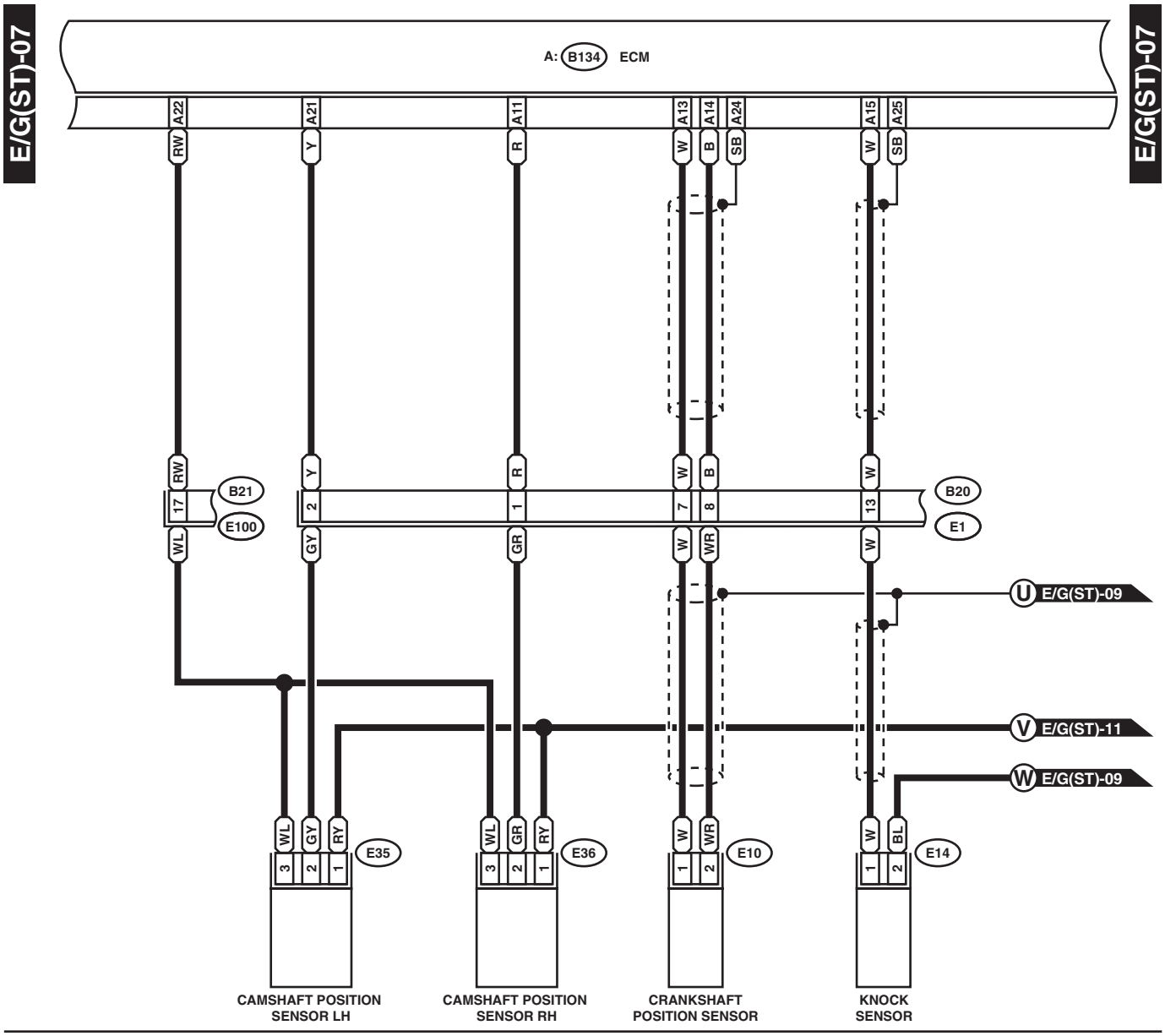
E/G(ST)-07
A: B134 ECM
A22
A21
A11
A13
A14
A24
A15
A25
RW
Y
R
W
B
SB
W
SB
B21
E100
B20
E1
17
2
1
7
8
13
WL
GY
GR
W
WR
W
U E/G(ST)-09
V E/G(ST)-11
W E/G(ST)-09
WL
GY
RY
E35
WL
GR
RY
E36
W
WR
E10
W
BL
E14
CAMSHAFT POSITION SENSOR LH
CAMSHAFT POSITION SENSOR RH
CRANKSHAFT POSITION SENSOR
KNOCK SENSOR
E10 (LIGHT GRAY)
E14 (LIGHT GRAY)
E35 (LIGHT GRAY)
E36 (LIGHT GRAY)
B20 (BROWN)
A: B134
B21 (BLACK)
WI-14341

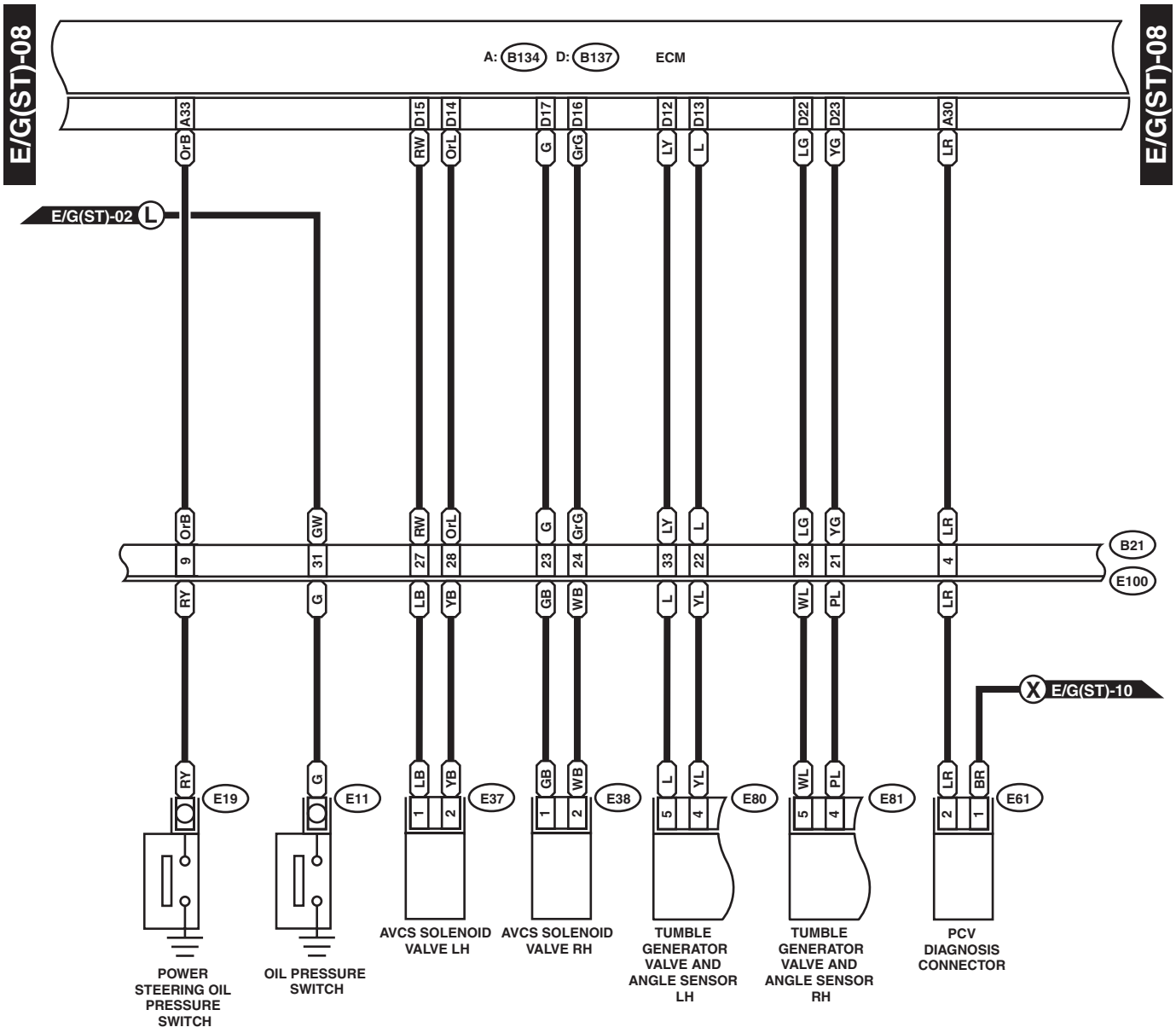
E/G(ST)-08
A: B134 D: B137
ECM
A33 OrB
D15 RW
D14 OrL
D17 G
D16 GrG
D12 LY
D13 L
D22 LG
D23 YG
A30 LR
E/G(ST)-02 L
9 OrB
31 GW
27 RW
28 OrL
23 G
24 GrG
33 LY
22 L
32 LG
21 YG
4 LR
B21
E100
RY
G
LB
YB
GB
WB
L
YL
WL
PL
LR
X E/G(ST)-10
BR
E19
E11
E37
E38
E80
E81
E61
POWER STEERING OIL PRESSURE SWITCH
OIL PRESSURE SWITCH
AVCS SOLENOID VALVE LH
AVCS SOLENOID VALVE RH
TUMBLE GENERATOR VALVE AND ANGLE SENSOR LH
TUMBLE GENERATOR VALVE AND ANGLE SENSOR RH
PCV DIAGNOSIS CONNECTOR

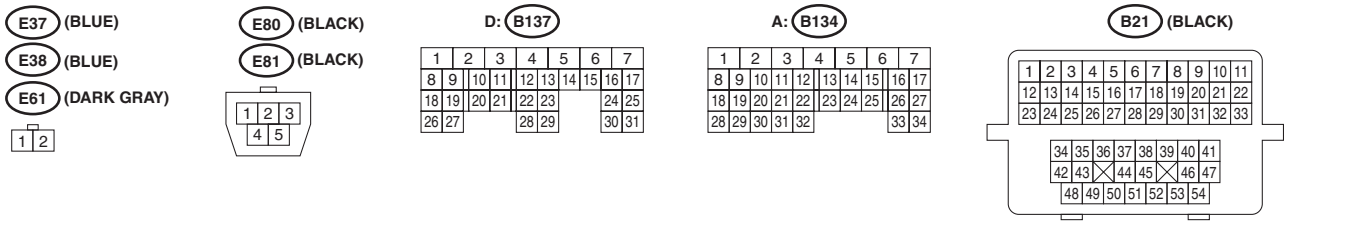
E37 (BLUE)
E38 (BLUE)
E61 (DARK GRAY)
E80 (BLACK)
E81 (BLACK)
D: B137
A: B134
B21 (BLACK)

WI-14342

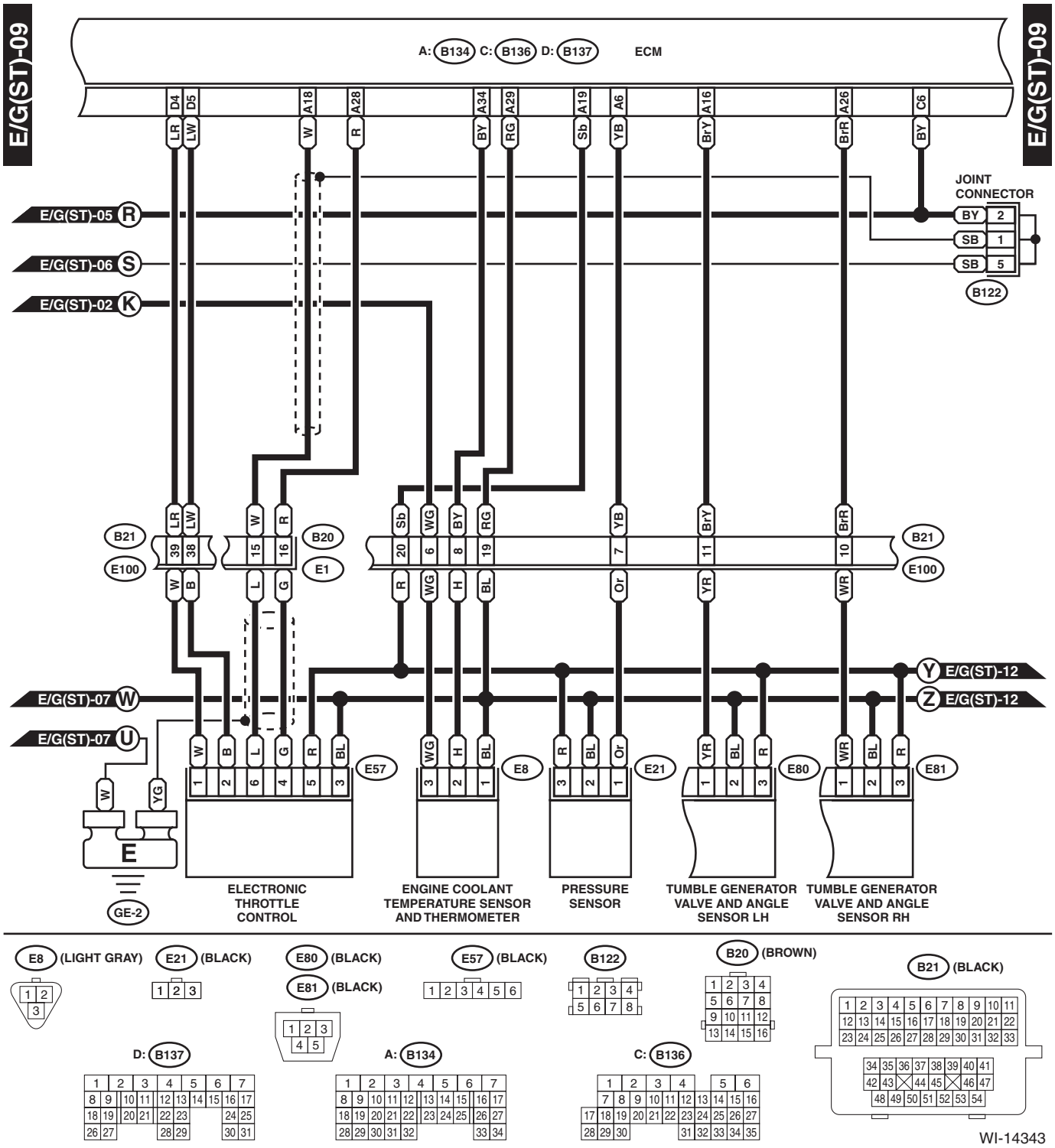
E/G(ST)-09
A: B134 C: B136 D: B137
ECM
JOINT CONNECTOR
E/G(ST)-05 R
E/G(ST)-06 S
E/G(ST)-02 K
B122
B21
E100
B20
E1
E/G(ST)-12 Y
E/G(ST)-12 Z
E/G(ST)-07 W
E/G(ST)-07 U
E57
E8
E21
E80
E81
GE-2
ELECTRONIC THROTTLE CONTROL
ENGINE COOLANT TEMPERATURE SENSOR AND THERMOMETER
PRESSURE SENSOR
TUMBLE GENERATOR VALVE AND ANGLE SENSOR LH
TUMBLE GENERATOR VALVE AND ANGLE SENSOR RH
E8 (LIGHT GRAY)
E21 (BLACK)
E80 (BLACK)
E81 (BLACK)
E57 (BLACK)
B122
B20 (BROWN)
B21 (BLACK)
D: B137
A: B134
C: B136
WI-14343

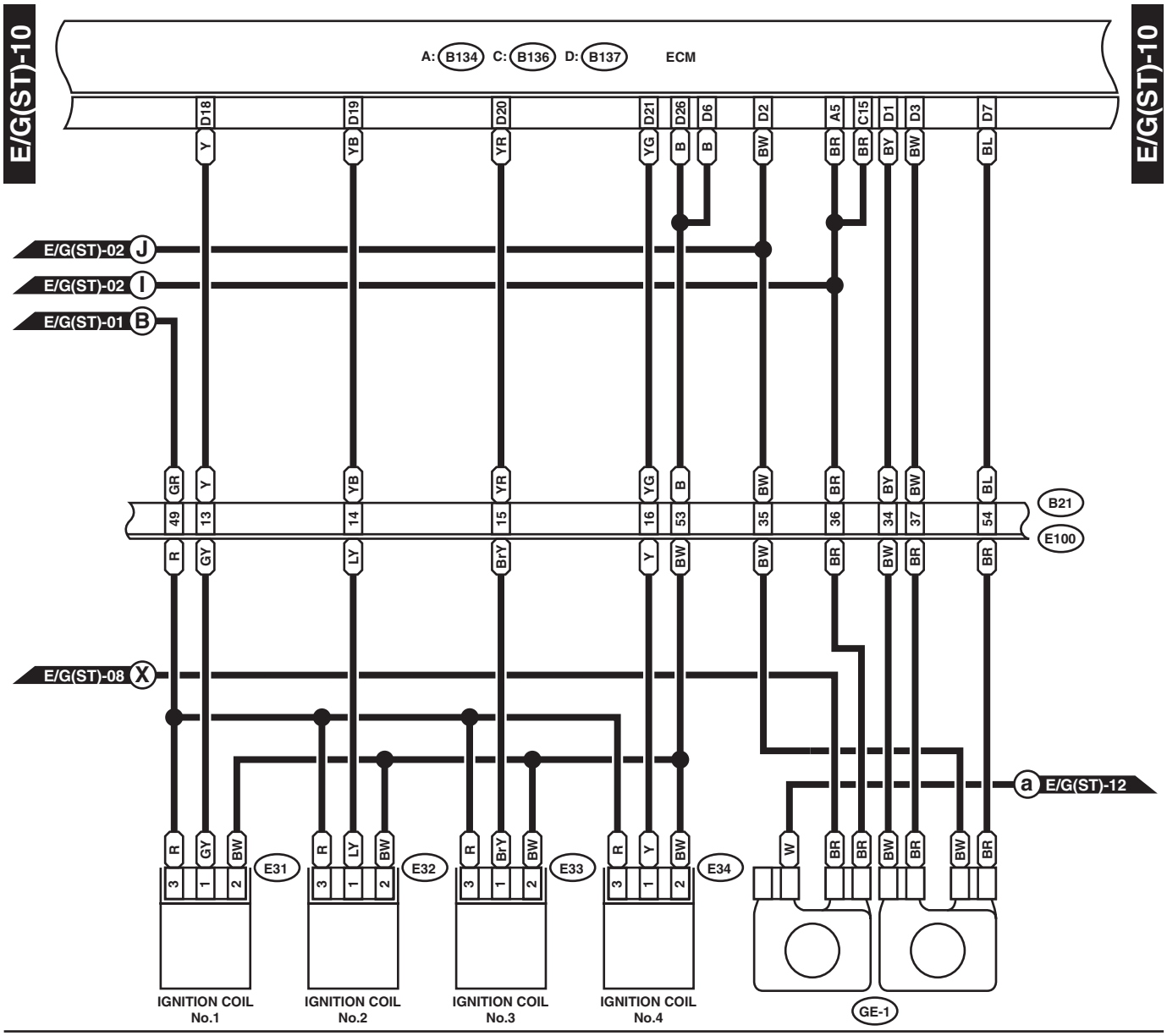
E/G(ST)-10
A: B134 C: B136 D: B137 ECM
D18 D19 D20 D21 D26 D6 D2 A5 C15 D1 D3 D7
Y YB YR YG B B BW BR BR BY BW BL
E/G(ST)-02 J
E/G(ST)-02 I
E/G(ST)-01 B
GR Y YB YR YG B BW BR BY BW BL
49 13 14 15 16 53 35 36 34 37 54
B21
E100
R GY LY BrY Y BW BW BR BW BR BR
E/G(ST)-08 X
a E/G(ST)-12
R GY BW
E31
R LY BW
E32
R BrY BW
E33
R Y BW
E34
W BR BR BW BR BW BR
IGNITION COIL No.1
IGNITION COIL No.2
IGNITION COIL No.3
IGNITION COIL No.4
GE-1
E31 (WHITE)
E32 (WHITE)
E33 (BLACK)
E34 (BLACK)
D: B137
A: B134
C: B136
B21 (BLACK)
WI-14344

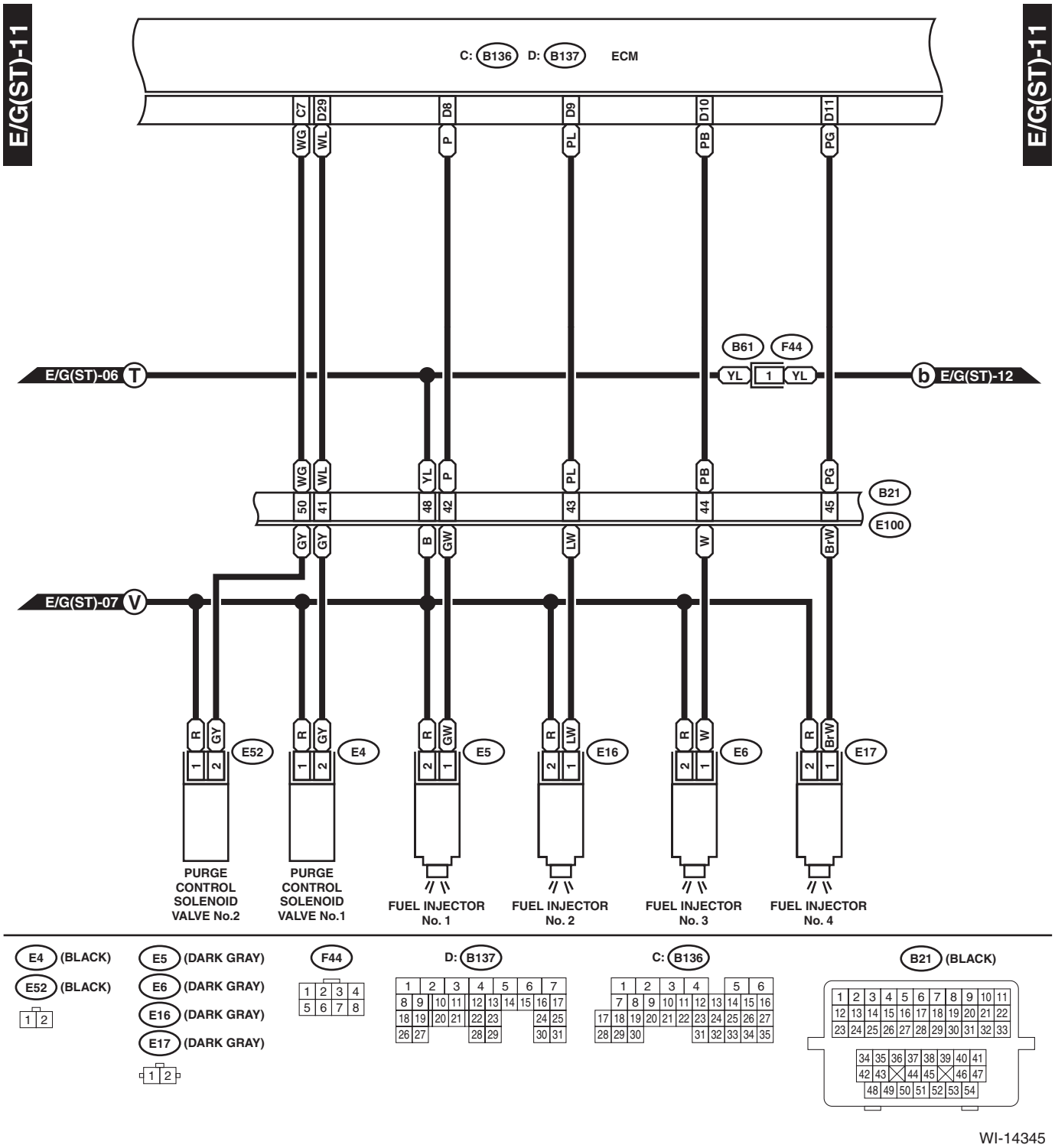
E/G(ST)-11
E/G(ST)-11
C: B136 D: B137 ECM
C7 D29 D8 D9 D10 D11
WG WL P PL PB PG
B61 F44
E/G(ST)-06 T
YL 1 YL
b E/G(ST)-12
WG WL YL P PL PB PG
50 41 48 42 43 44 45
B21
E100
GY GY B GW LW W Br·W
E/G(ST)-07 V
R GY E52
R GY E4
R GW E5
R LW E16
R W E6
R Br·W E17
PURGE CONTROL SOLENOID VALVE No.2
PURGE CONTROL SOLENOID VALVE No.1
FUEL INJECTOR No. 1
FUEL INJECTOR No. 2
FUEL INJECTOR No. 3
FUEL INJECTOR No. 4
E4 (BLACK)
E52 (BLACK)
E5 (DARK GRAY)
E6 (DARK GRAY)
E16 (DARK GRAY)
E17 (DARK GRAY)
F44
D: B137
C: B136
B21 (BLACK)
WI-14345

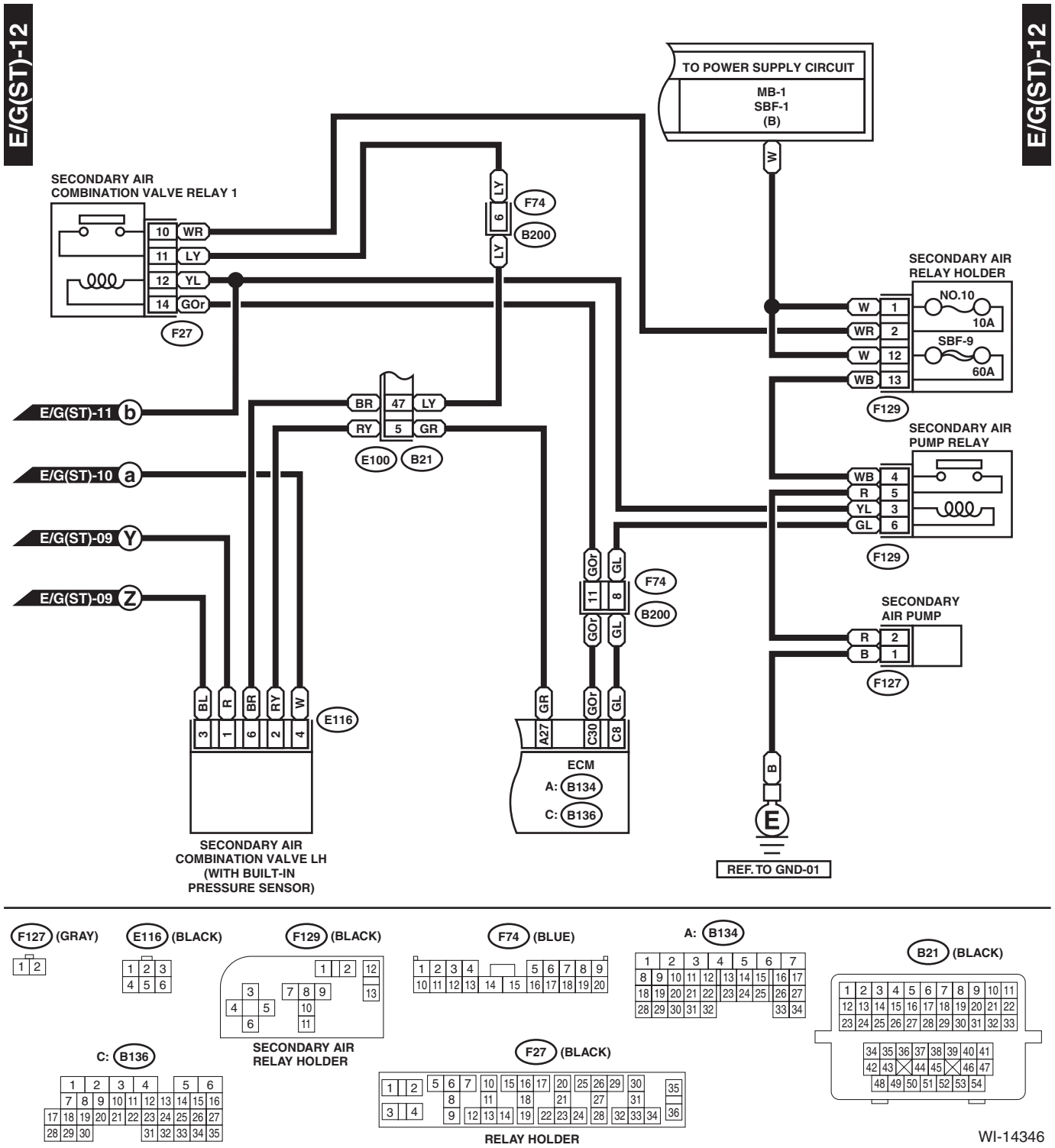
E/G(ST)-12
E/G(ST)-12
TO POWER SUPPLY CIRCUIT
MB-1
SBF-1
(B)
W
SECONDARY AIR
COMBINATION VALVE RELAY 1
10 WR
11 LY
12 YL
14 GOr
F27
LY
6
LY
F74
B200
SECONDARY AIR
RELAY HOLDER
NO.10
10A
SBF-9
60A
W 1
WR 2
W 12
WB 13
F129
E/G(ST)-11 b
BR 47 LY
RY 5 GR
E100
B21
SECONDARY AIR
PUMP RELAY
WB 4
R 5
YL 3
GL 6
F129
E/G(ST)-10 a
E/G(ST)-09 Y
E/G(ST)-09 Z
GOr
GL
11
8
F74
B200
GOr
GL
SECONDARY
AIR PUMP
R 2
B 1
F127
BL
R
BR
RY
W
3
1
6
2
4
E116
GR
A27
GOr
C30
GL
C8
ECM
A: B134
C: B136
B
E
REF. TO GND-01
SECONDARY AIR
COMBINATION VALVE LH
(WITH BUILT-IN
PRESSURE SENSOR)
F127 (GRAY)
E116 (BLACK)
F129 (BLACK)
F74 (BLUE)
A: B134
B21 (BLACK)
SECONDARY AIR
RELAY HOLDER
C: B136
F27 (BLACK)
RELAY HOLDER
WI-14346